INFORMATION SHEET

AB 11 EN

SAMSON's modular design concept

Function blocks for valve accessories with NAMUR interface

Application

This document provides an overview of SAMSON's modular function blocks for valve accessories with a NAMUR interface. Such function blocks include adapter plates, double-axial adapters and restrictor plates as well as special constructions.

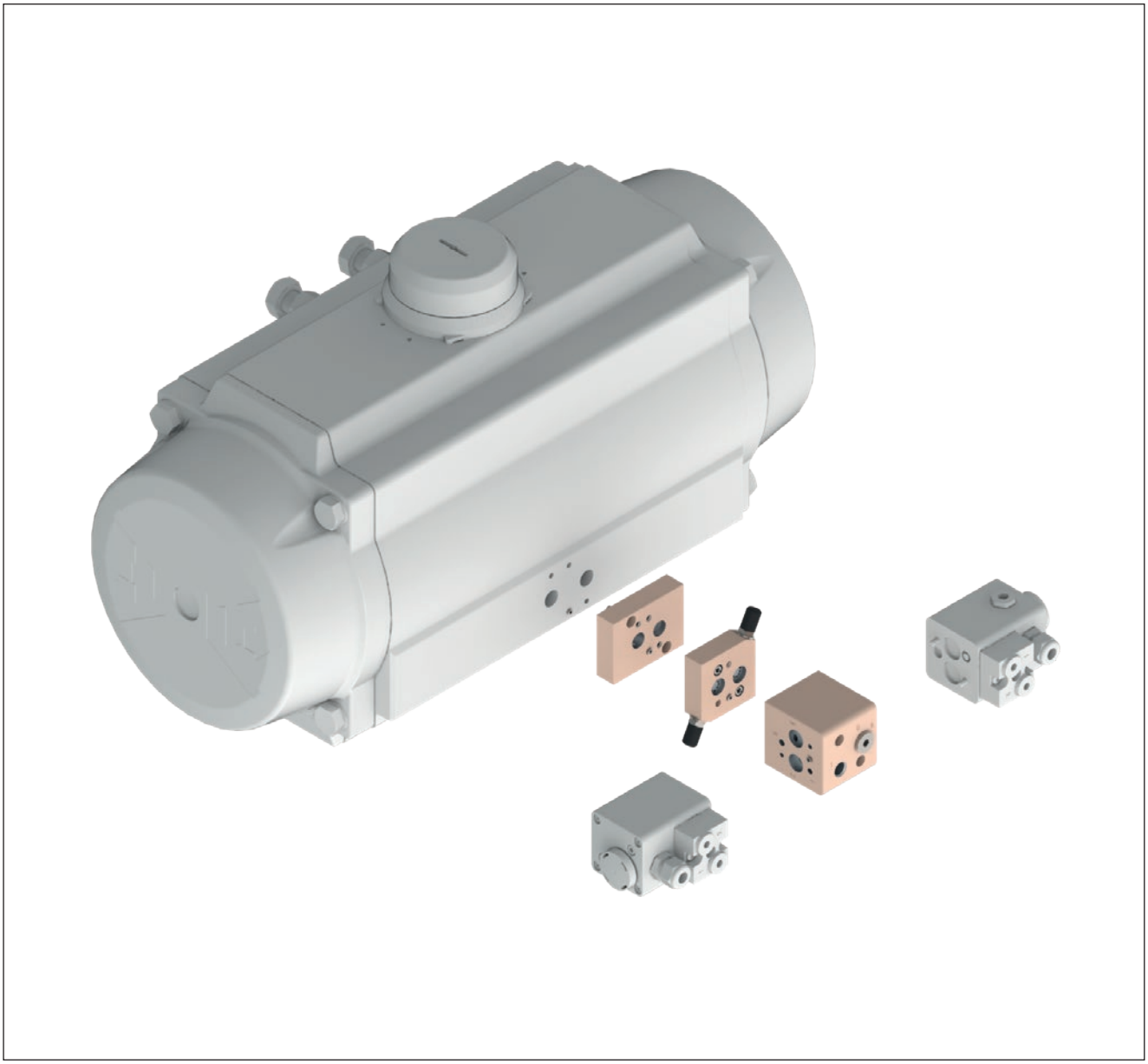

SAMSON AKTIENGESELLSCHAFT · Weismüllerstraße 3 · 60314 Frankfurt am Main, Germany
Phone: +49 69 4009-0 · Fax: +49 69 4009-1507 · samson@samsongroup.com · www.samsongroup.com

Edition February 2022

Contents

1 General · Functions and scope of application

The modular design allows SAMSON solenoid valves to be easily adapted to various applications. As a common pneumatic interface, the NAMUR interface according to VDI/VDE 3845 is used for thread sizes ¼" and ½", while the extended NAMUR interface according to VDI/VDE 3847 can also be used for thread size ¼".

The standardized interface allows the modular parts to be combined with each other as required.

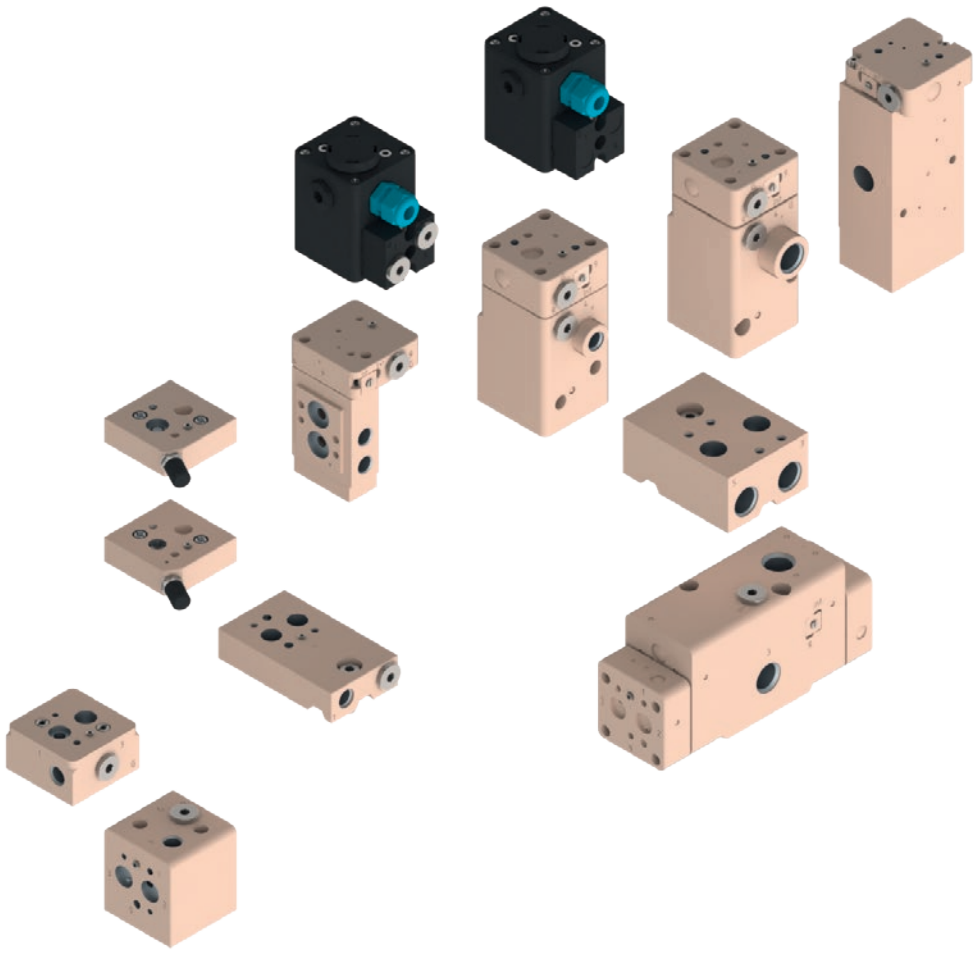

Fig. 1: *SAMSON's modular design concept for solenoid valves*

1.1 NAMUR interface according to VDI/VDE 3845 and VDI/VDE 3847

1.1.1 NAMUR interface according to VDI/VDE 3845

The NAMUR interface is a standardized interface for attachment. The interface includes two 'Supply (actuator)' air ducts (port 2) or 'Exhaust (actuator)' air ducts (port 3) as well as four tapped holes for mounting (see Fig. 2). The supply (port 1) and any pilot supply required (port 9) must be routed or hooked up separately.

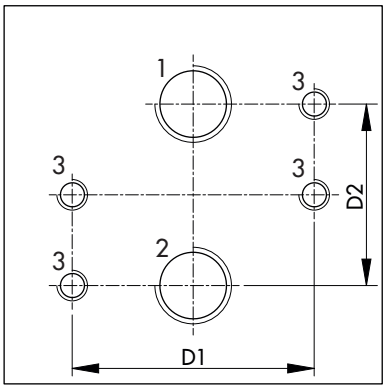

1 'Supply (actuator)' air duct
2 'Exhaust (actuator)' air duct
3 M5 holes for mounting/
Hole for coded screw

Fig. 2: *NAMUR interface according to VDI/VDE 3845*

The NAMUR interface according to VDI/VDE 3845 is available in ¼" and ½" sizes (sizes relating to the air ducts). The M5 (¼") and M6 (½") holes for mounting are additionally used to mount a coded screw, which prescribes the mounting position of the solenoid valve. Refer to VDI/VDE 3845 for a precise description of the pneumatic interface.

1.1.2 Extended NAMUR interface according to VDI/VDE 3847

In contrast to the VDI/VDE 3845, the NAMUR interface according to VDI/VDE 3847 has additional air ducts for supply (port 1) and the external pilot supply (port 9). See Fig. 3.

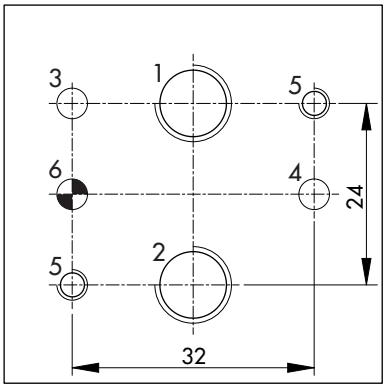

1 'Supply (actuator)' air duct
2 'Exhaust (actuator)' air duct
3 'Supply air' air duct
4 'External pilot supply' air duct
5 M5 holes for mounting
6 Hole for coded screw

Fig. 3: *Extended NAMUR interface according to VDI/VDE 3847*

The extended NAMUR interface provides all pneumatic connections required in one interface. It allows solenoid valves to be directly mounted on actuators/components without an additional connection of the supply or external pilot supply. The mounted coded screw prescribes the installation direction of the solenoid valve. It ensures that the additional air ducts (1 and 9) are always in the correct position. The NAMUR interface according to VDI/VDE 3847 is available in ¼" size (size relating to the air ducts for supply and exhaust of the actuator).

The extended NAMUR interface according to VDI/VDE 3847 is compatible with the NAMUR interface according to VDI/VDE 3845 provided the ports 1 and 9 are sealed air-tight. In this case, the supply and external pilot supply (if required) must be routed separately again.

Two M5 holes are used for mounting. Refer to VDI/VDE 3847 for a precise description of the pneumatic interface.

1.1.3 Port labeling

If not specified otherwise, the port labeling of the (extended) NAMUR interface is as follows:

Port	Function
1	Supply air
2	Actuator (supply)
3	Actuator (exhaust)
9	External pilot supply

1.2 Materials

If not specified otherwise, the specifications used describe the following materials:

Specification	Material designation and surface finish
Aluminum	EN AW-6082-T6/DIN EN 754-2 · Powder coated
Stainless steel	1.4404/DIN EN 10088-3 · No surface finish

1.3 Threaded connections

Components with a thread are marked correspondingly. Both Whitworth pipe threads (G) or threads according to national pipe thread standards (NPT) are available:

Specification	Thread standard
G	Whitworth pipe thread – ISO 228
NPT	National Pipe Thread – ASME/ANSI B1.20.1

i Note

Thread diameter specifications are stated in inches.

2 Adapter plates

The SAMSON modular adapter plates are mounted between the actuator and pilot valve. They are suitable for adapting the (extended) NAMUR interface of the pilot valve to the installation conditions, a different actuator interface or various types of attachment.

2.1 Distance plate with extended NAMUR interface ¼“

Distance plate made of aluminum/stainless steel, for pilot valves with NAMUR interface according to VDI/VDE 3845 or VDI/VDE 3847 on actuators with NAMUR interface according to VDI/VDE 3845 or integral attachment according to VDI/VDE 3847 including fastening screws and seals.

➔ See Fig. 4.

Order no.:	Aluminum, Ematal coating: G ¼: **1400-9741** Stainless steel G ¼: **1402-0234**
Mounting interface:	Actuators with interface according to VDI/VDE 3845 (¼“) or integral attachment (¼“) according to VDI/VDE 3847 interface
Pilot valve interface:	Pilot valves with NAMUR interface ¼“ according to VDI/VDE 3845 or extended NAMUR interface ¼“ according to VDI/VDE 3847
Description of functions:	The distance plate is mounted between the actuator and pilot valve. Additional space is gained by using the distance plate. As a result, it is possible to also mount pilot valves whose shape prevents them being flush-mounted directly to the actuator.
Logic symbol:	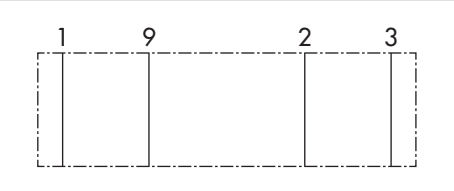

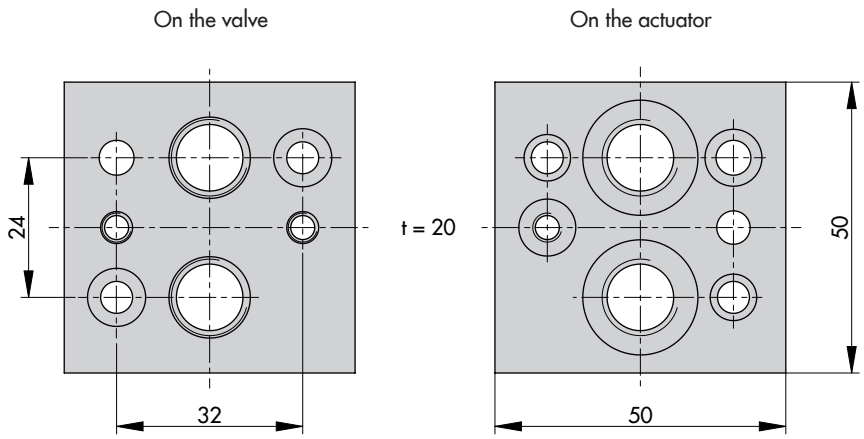

Dimensions (in mm)

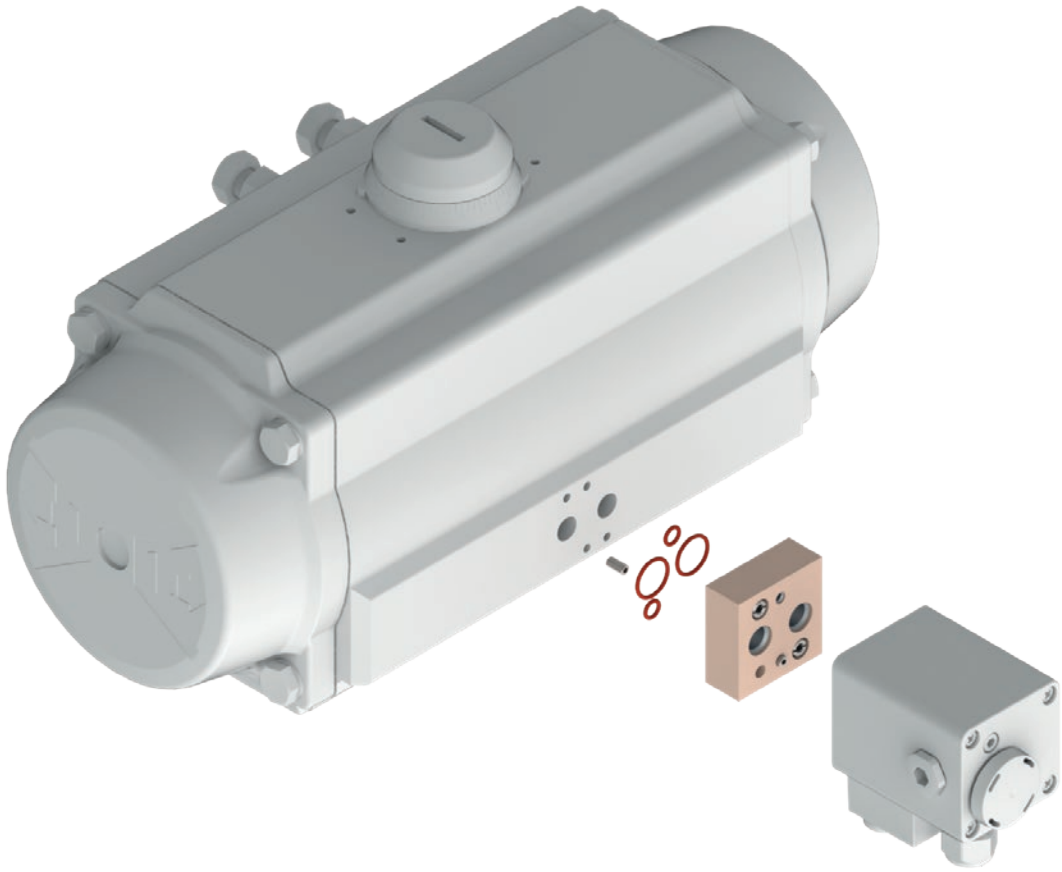

Fig. 4: *Distance plate to mount a Type 3967 Solenoid Valve on a rotary actuator*

2.2 Distance plate with NAMUR interface ½“

Distance plate made of aluminum, for pilot valves with NAMUR interface according to VDI/VDE 3845 on actuators with NAMUR interface according to VDI/VDE 3845 including fastening screws and seals.

➔ See Fig. 5.

Order no.:	Aluminum G ½: **1400-9743**
Mounting interface:	Actuators with VDI/VDE 3845 interface ½“
Pilot valve interface:	Pilot valves with NAMUR interface ½“ according to VDI/VDE 3845
Description of functions:	The distance plate is mounted between the actuator and pilot valve. Additional space is gained by using the distance plate. As a result, it is possible to also mount pilot valves whose shape prevents them being flush-mounted directly to the actuator.
Logic symbol:	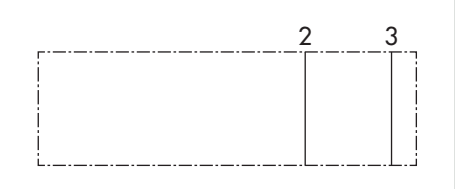

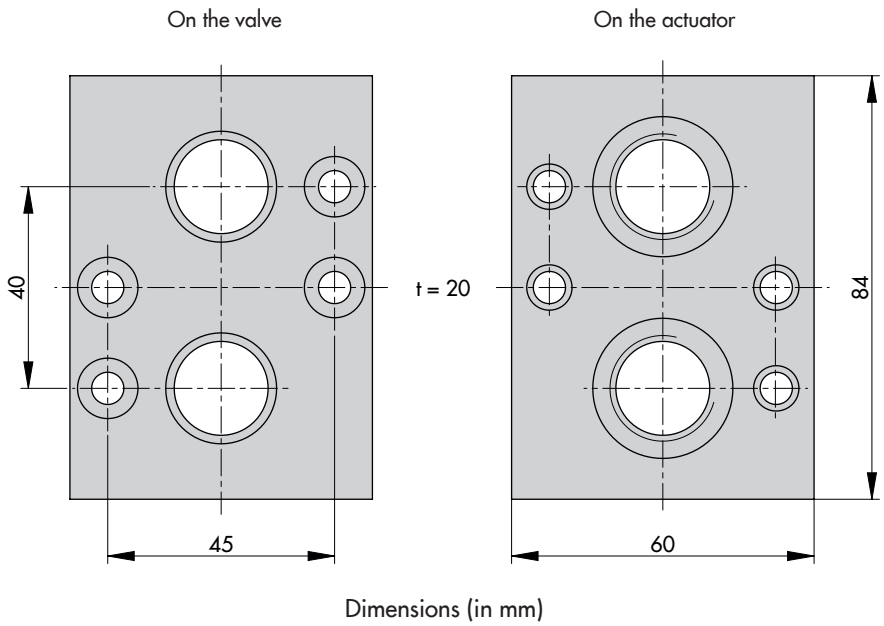

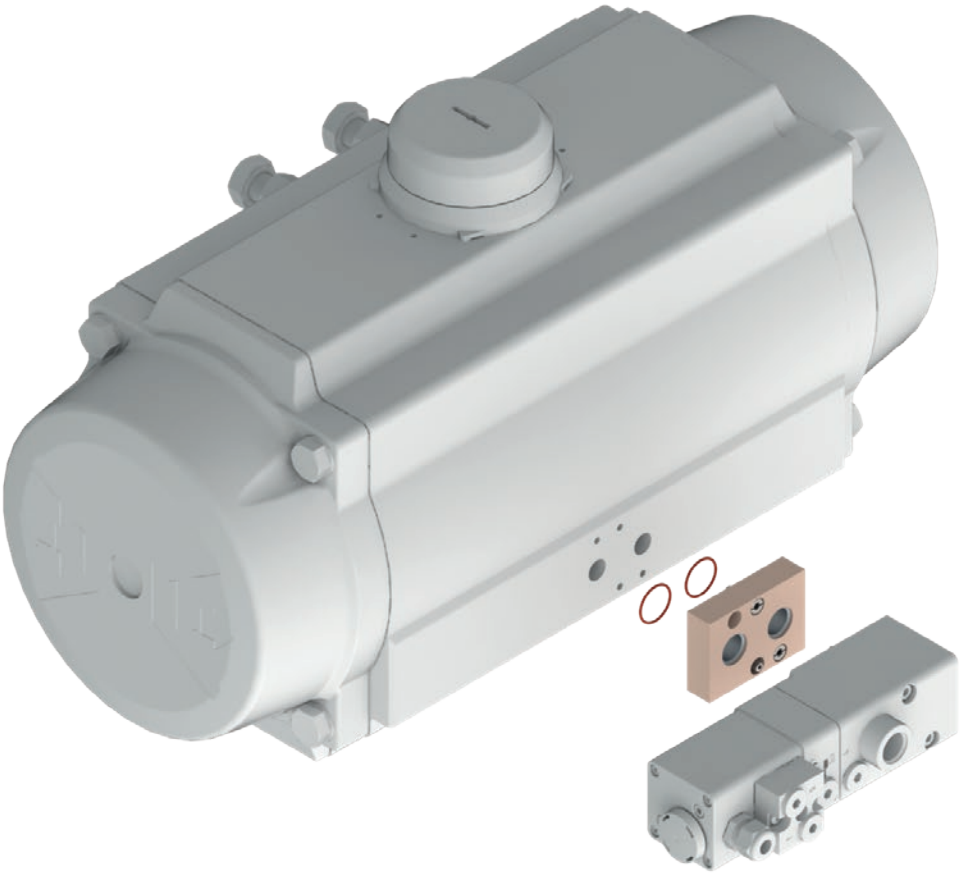

Fig. 5: *Distance plate to mount a Type 3967 Solenoid Valve on a rotary actuator*

2.3 Sealing plate with extended NAMUR interface ¼“

Sealing plate made of aluminum, for pilot valves with NAMUR interface according to VDI/VDE 3847 on actuators with NAMUR interface according to VDI/VDE 3845 including fastening screws and seals.

➔ See Fig. 6.

Order no.:	Aluminum: **1402-1480**
Mounting interface:	Actuators with VDI/VDE 3845 interface ¼“
Pilot valve interface:	Pilot valves with extended NAMUR interface ¼“ according to VDI/VDE 3847
Description of functions:	The sealing plate is mounted between the actuator with NAMUR interface according to VDI/VDE 3845 and pilot valve. The sealing plate is used to mount pilot valves with an extended NAMUR interface according to VDI/VDE 3847 onto an actuator whose facing is too small to seal the pilot air ducts 1 and 9 of the extended NAMUR interface.
Logic symbol:	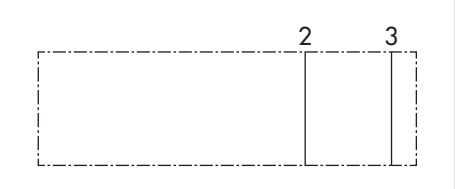

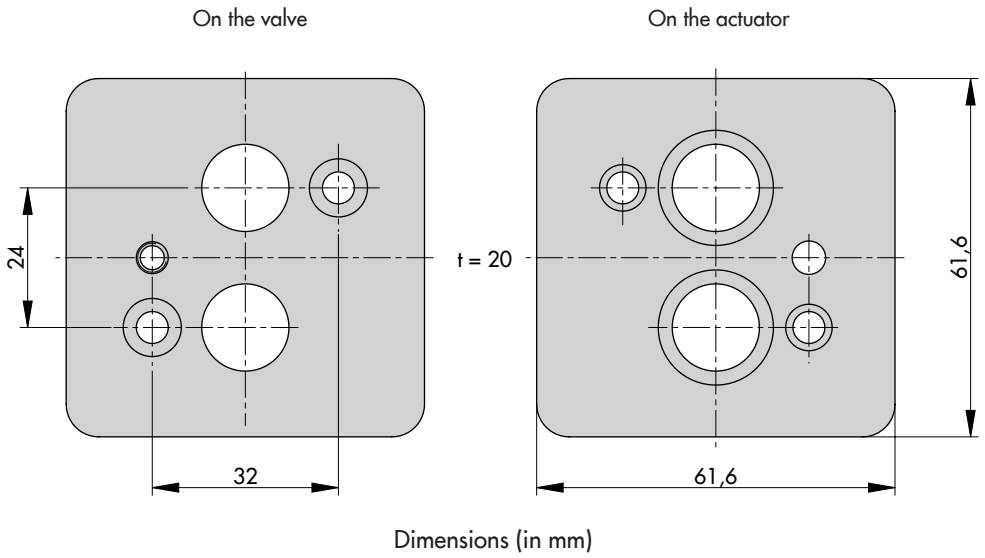

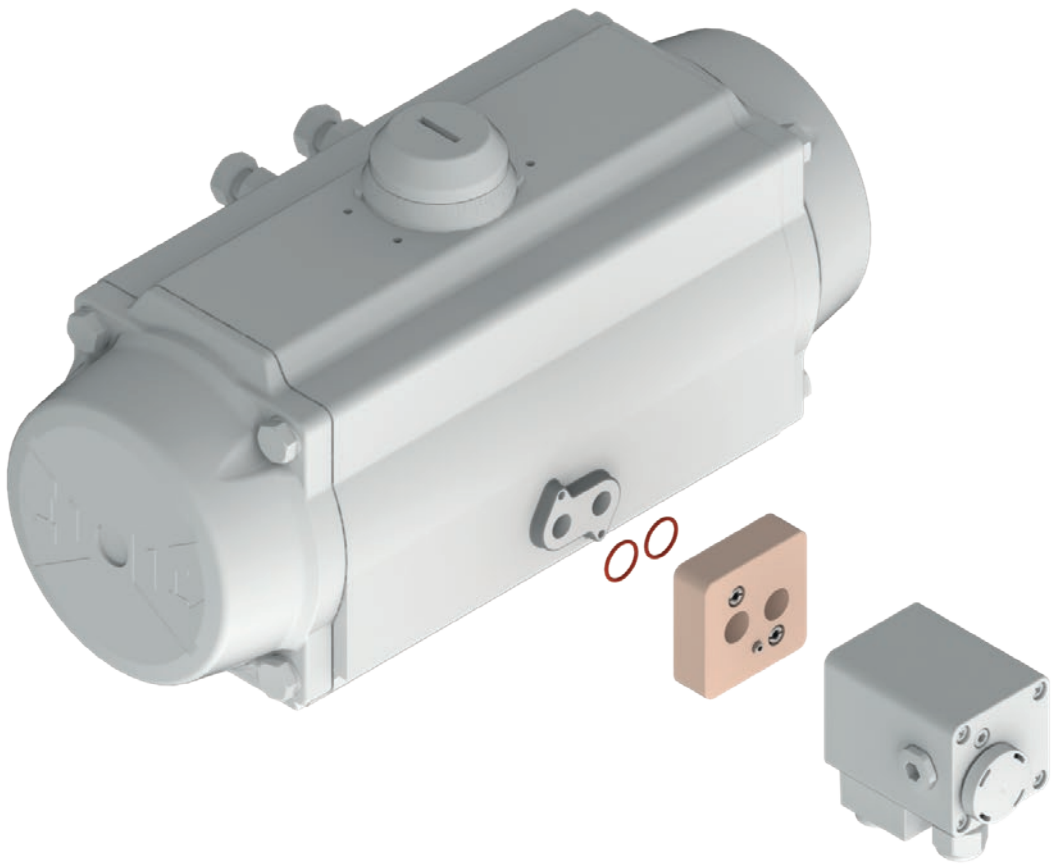

Fig. 6: *Sealing plate to mount a Type 3967 Solenoid Valve on a rotary actuator*

2.4 Adapter plate for NAMUR interface ¼“ on NAMUR interface ½“

Adapter plate made of aluminum/stainless steel, for pilot valves with NAMUR interface according to VDI/VDE 3845 or VDI/VDE 3847 on actuators with NAMUR interface according to VDI/VDE 3845 including fastening screws and seals.

➔ See Fig. 7.

Order no.:	Aluminum, Ematal coating: **1380-1652** Stainless steel: **1380-1797**
Mounting interface:	Actuators with VDI/VDE 3845 interface ½“
Pilot valve interface:	Pilot valves with NAMUR interface ¼“ according to VDI/VDE 3845 or extended NAMUR interface ¼“ according to VDI/VDE 3847
Description of functions:	The adapter plate is mounted between the actuator and pilot valve. The adapter plate is used to mount pilot valves with a NAMUR interface according to VDI/VDE 3845 or VDI/VDE 3847 with ¼“ thread on actuators with NAMUR interface according to VDI/VDE 3845 with ½“ thread. When pilot valves with extended NAMUR interface according to VDI/VDE 3847 are used, ports 1 and 9 are sealed off by the adapter plate.
Logic symbol:	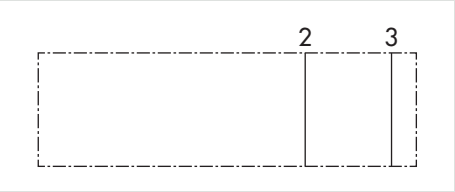

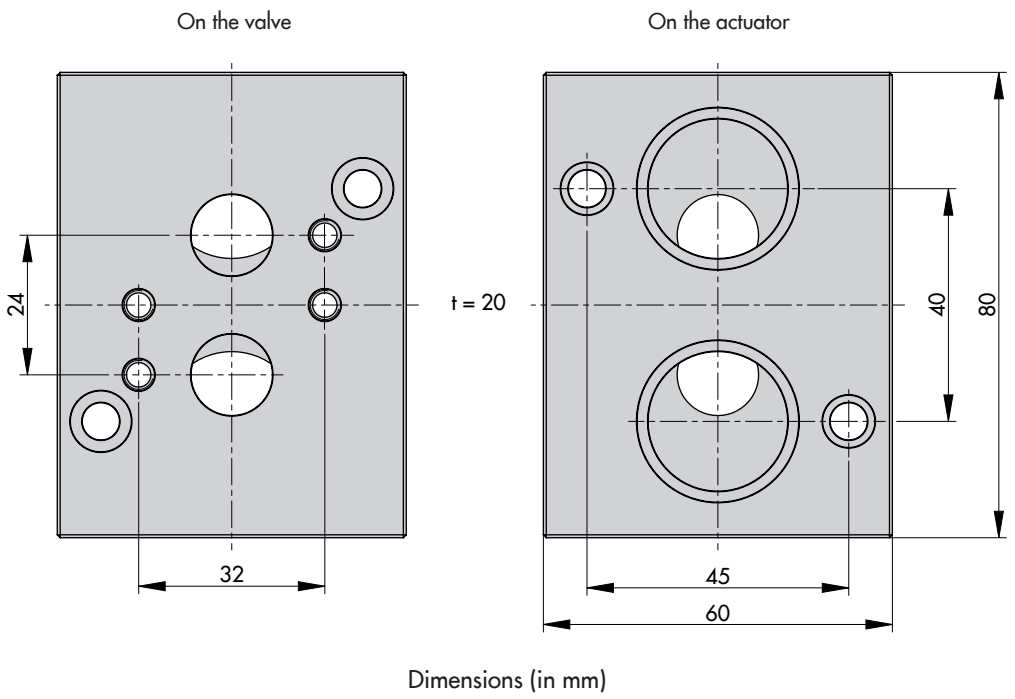

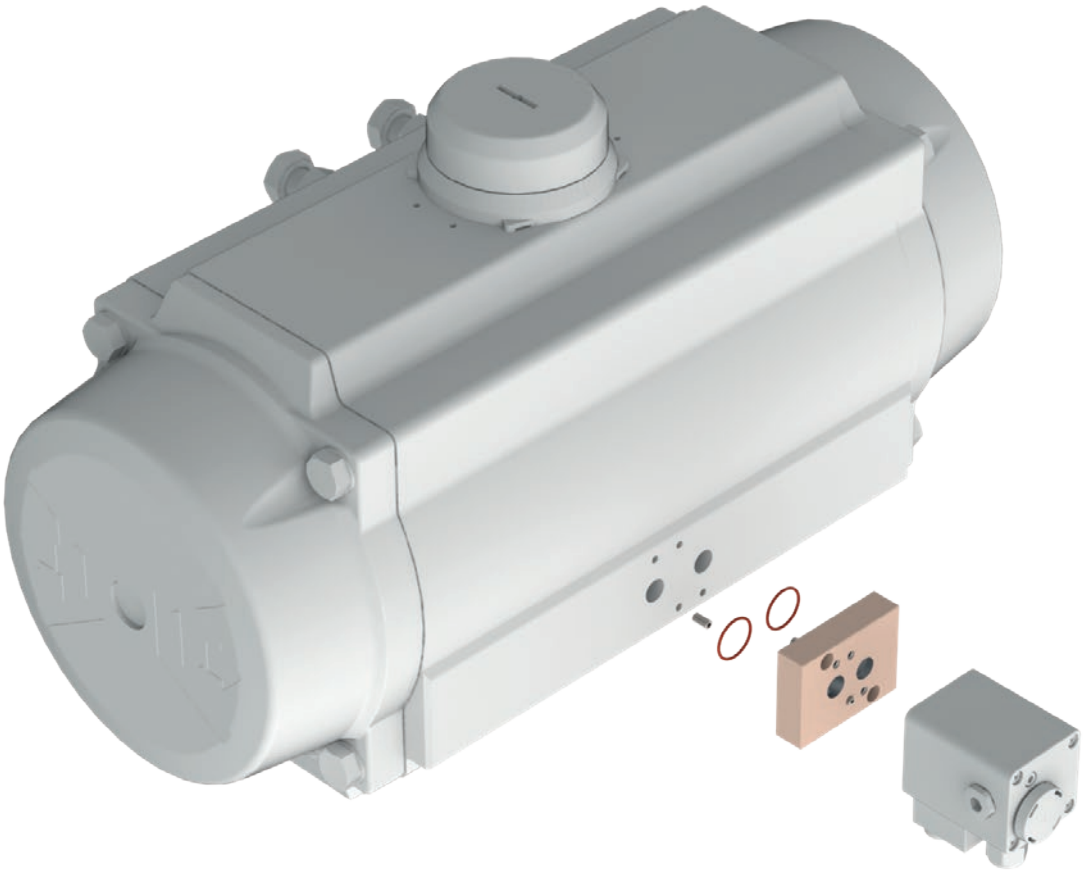

Fig. 7: *Adapter plate to mount a Type 3967 Solenoid Valve on a rotary actuator*

2.5 Adapter plate for NAMUR interface ½“ on NAMUR interface ¼“

Adapter plate made of aluminum/stainless steel, for pilot valves with NAMUR interface according to VDI/VDE 3845 on actuators with NAMUR interface according to VDI/VDE 3845 including fastening screws and seals.

➔ See Fig. 8.

Order no.:	Aluminum, Ematal coating: **1380-1795** Stainless steel: **1380-1796**
Mounting interface:	Actuators with VDI/VDE 3845 interface ¼“
Pilot valve interface:	Pilot valves with NAMUR interface ½“ according to VDI/VDE 3845
Description of functions:	The adapter plate is mounted between the actuator and pilot valve. The adapter plate is used to mount pilot valves with a NAMUR interface according to VDI/VDE 3845 with ½“ thread on actuators with NAMUR interface according to VDI/VDE 3845 with ¼“ thread.
Logic symbol:	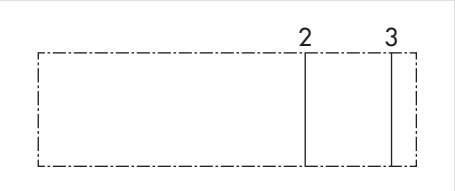

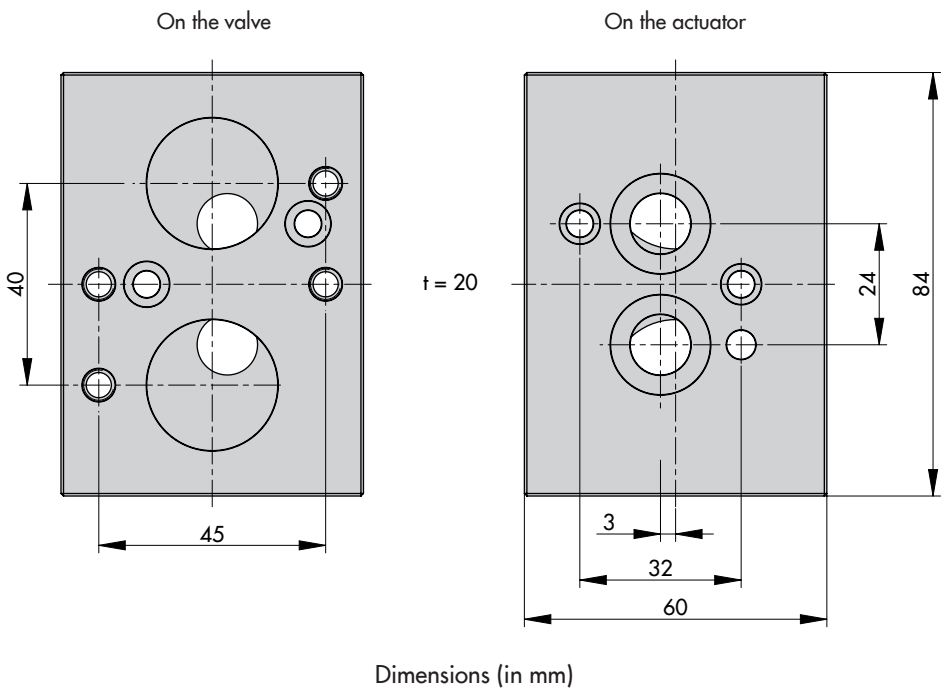

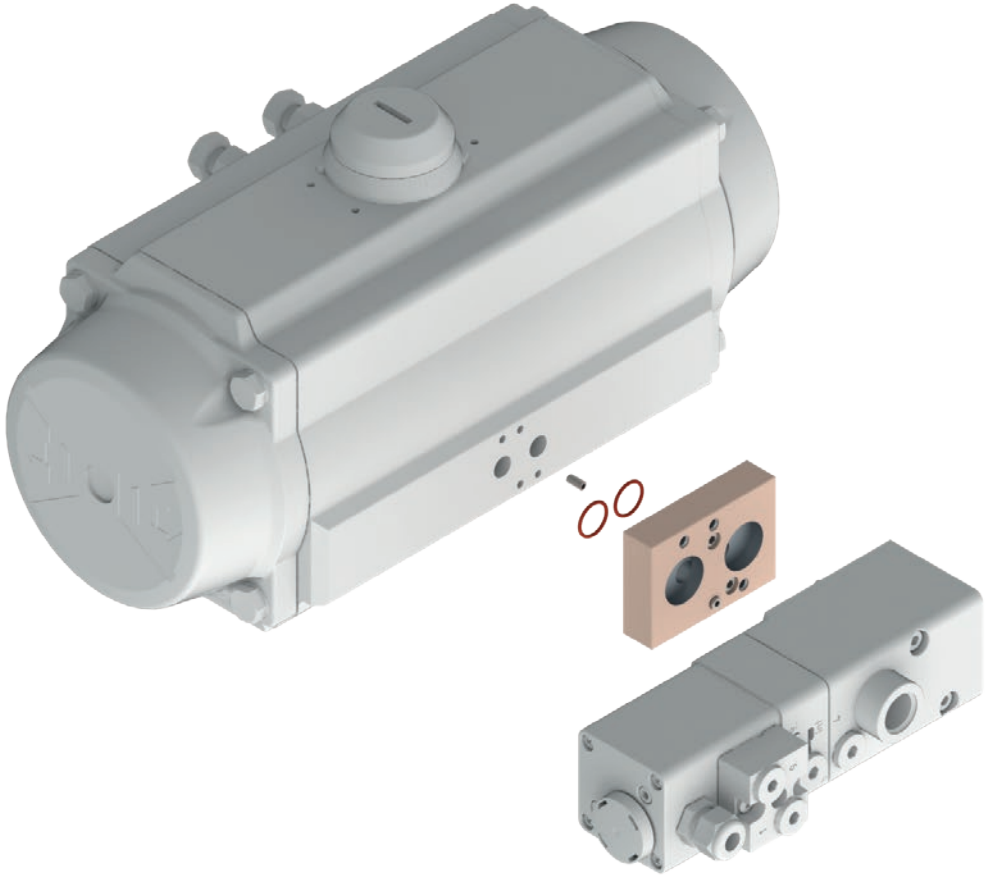

Fig. 8: *Adapter plate to mount a Type 3967 Solenoid Valve on a rotary actuator*

2.6 Adapter plate for extended NAMUR interface ¼" with external threaded connections

Adapter plate with threaded connections made of aluminum (with Ematal coating)/stainless steel, for pilot valves with extended NAMUR interface according to VDI/VDE 3847 on actuators with NAMUR interface according to VDI/VDE 3845 including fastening screws and seals and ⅛" vent plug (see Fig. 9).

Order no.:	Aluminum, Ematal coating	G ¼:	**1402-0695**
	Aluminum	¼ NPT:	**1402-0697**
	Stainless steel	G ¼:	**1402-0696**
	Stainless steel	¼ NPT:	**1402-0698**
	Accessories		
	Vent plug	G ⅛ · ⅛ NPT:	**1992-3965**
	Screw plug	G ⅛ · ⅛ NPT:	**8323-0028**
	Seal for screw plug:		**8414-0136**
Mounting interface:	Actuators with interface according to VDI/VDE 3845 (¼") or integral attachment (¼") according to VDI/VDE 3847 interface		
Pilot valve interface:	Pilot valves with extended NAMUR interface ¼" according to VDI/VDE 3847		
Description of functions:	The adapter plate is mounted between the actuator with NAMUR interface according to VDI/VDE 3845 and pilot valve. The supply air is connected to port 1 of the adapter plate, which is supplied to the port 1 of the pilot valve through the extended NAMUR interface according to VDI/VDE 3847. An external pilot supply can be used at port 9 of the adapter plate for pilot-operated valves. The adapter plate is fitted with two vent plugs in port 3 (one ¼" and one ⅛"). Both ports 3 on the adapter plate can be used for an optional exhaust air feedback of other valve accessories. The ⅛" vent plug is sealed by a blanking plug in the delivered state. The ⅛" vent plug is included in the scope of delivery. The adapter plate allows the pilot valve to be exchanged without making any changes to the air supply lines.		
Logic symbol:	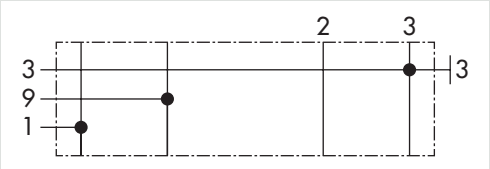		

Note

If the pilot valve does not have its own vent plug, the ⅛" screw plug must be replaced with the ⅛" vent plug (1992-3965) included in the scope of delivery.

NOTICE

The exhaust air pressure must not exceed 6 bar when the ⅛ vent plug (1992-3965) is used.

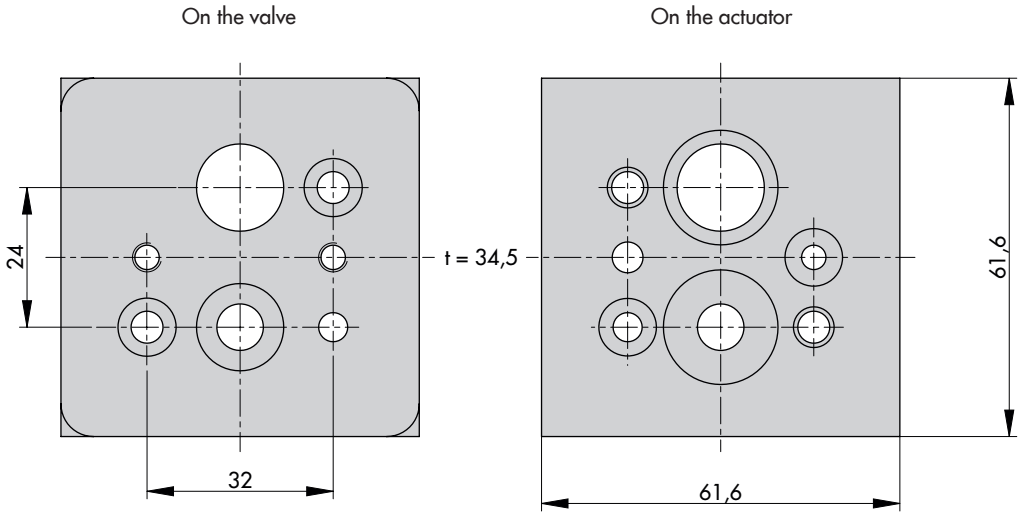

Dimensions (in mm)

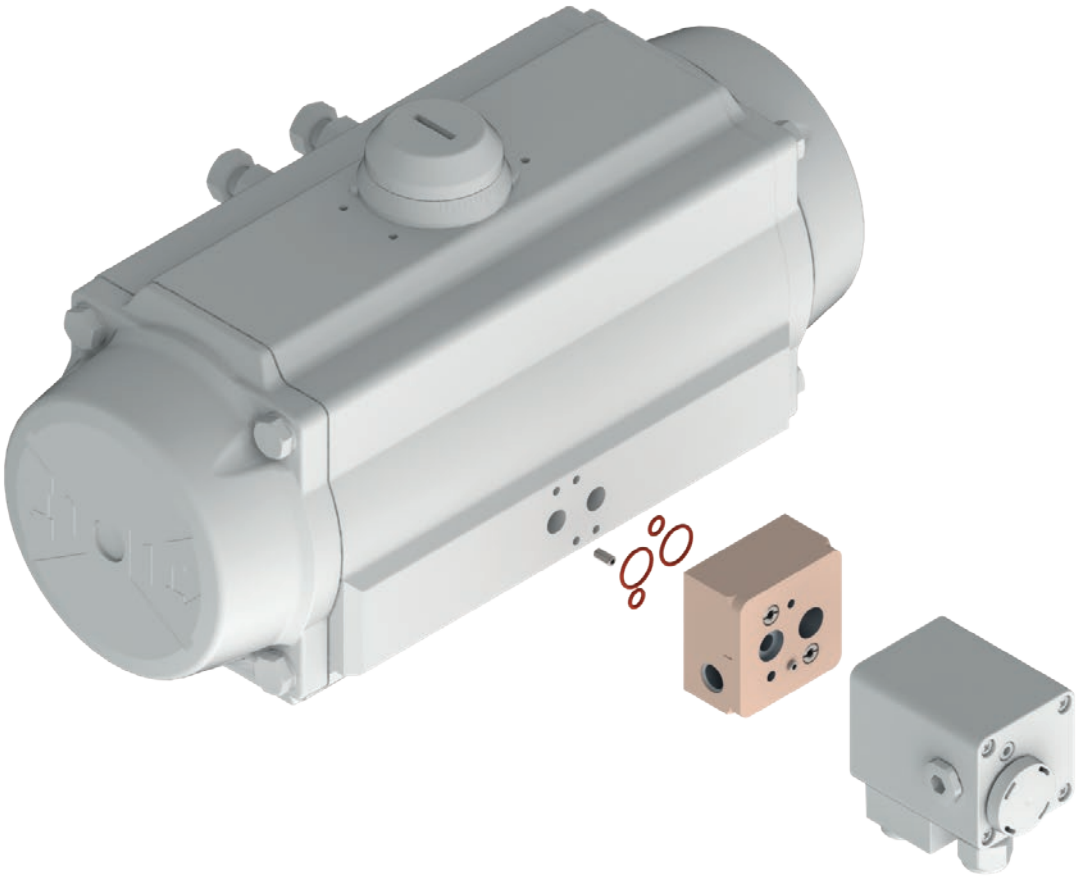

Fig. 9: *Adapter plate with external connection to mount a Type 3967 Solenoid Valve on a rotary actuator*

2.7 Adapter plate for NAMUR interface ½“ on threaded connection ½“

Adapter plate with threaded connections, made of aluminum (powder coated)/stainless steel, for pilot valves with NAMUR interface according to VDI/VDE 3845 on threaded connection

➔ See Fig. 10.

Order no.:	Aluminum, Ematal coating	G ½:	**1402-1833**
	Aluminum	½ NPT:	**1402-1834**
	Stainless steel	G ½:	**1402-1835**
	Stainless steel	½ NPT:	**1402-1836**
Mounting interface:	Actuators with threaded connections		
Pilot valve interface:	Pilot valves with NAMUR interface ½“ according to VDI/VDE 3845		
Description of functions:	The adapter plate is mounted between the actuator with threaded connection and the pilot valve. The adapter plate is used to fit pilot valves with a NAMUR interface according to VDI/VDE 3845 with ½”-size with a connecting thread and integrate them into a pipe connection.		
Logic symbol:	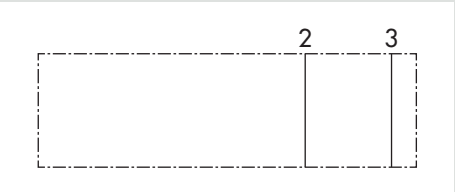		

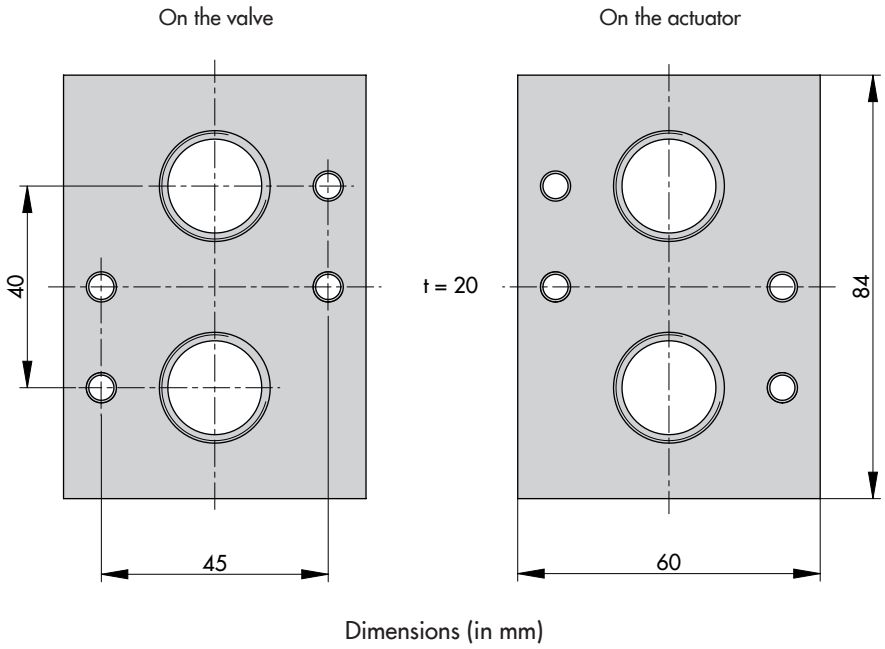

Fig. 10: *Adapter plate to mount a Type 3967 Solenoid Valve on a linear actuator*

2.8 Adapter plate with extended NAMUR interface ¼“ on NAMUR rib

Adapter plate with threaded connections, made of aluminum/stainless steel, for pilot valves with extended NAMUR interface according to VDI/VDE 3847 on actuators with NAMUR rib according to IEC 60534-6 including fastening screw.

➔ See Fig. 11.

Order no.:	Aluminum, Ematal coating	G ¼:	**1400-9598**
	Aluminum	¼ NPT:	**1400-9599**
	Stainless steel	G ¼:	**1400-9600**
	Stainless steel	¼ NPT:	**1400-9601**
Mounting interface:	Actuators with NAMUR rib according to IEC 60534-6/actuators with threaded connections		
Pilot valve interface:	Pilot valves with extended NAMUR interface ¼“ according to VDI/VDE 3847		
Description of functions:	The adapter plate is mounted between the actuator and pilot valve. The adapter plate is used to mount the pilot valve to the NAMUR rib according to IEC 60534-6 and to integrate it into the pipeline using the connecting thread. The supply air is connected to port 1 of the adapter plate, which is supplied to the port 1 of the pilot valve through the extended NAMUR interface according to VDI/VDE 3847. An external pilot supply can be used at port 9 of the adapter plate for pilot-operated valves. The port 3 of the adapter plate can be used for an optional exhaust air feedback of other valve accessories. The adapter plate allows the pilot valve to be exchanged without making any changes to the air supply lines.		
Logic symbol:	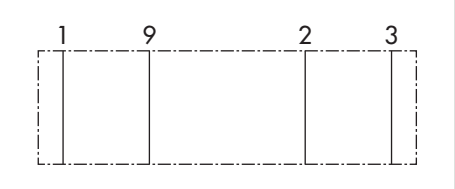		

i ***Note***

If the pilot valve does not have separate venting, install a vent plug in the pipe at port 3.

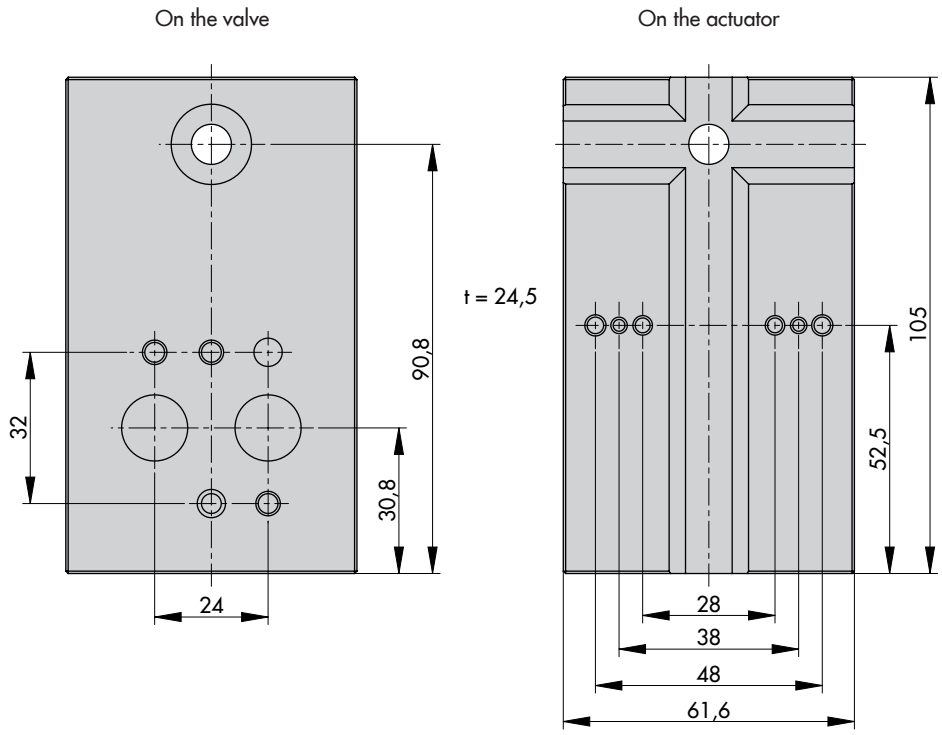

Dimensions (in mm)

Fig. 11: *Adapter plate to mount a Type 3967 Solenoid Valve on a linear actuator*

2.9 Adapter plate with NAMUR interface ¼“ on NAMUR rib

Adapter plate with threaded connections, made of aluminum, for pilot valves with NAMUR interface according to VDI/VDE 3845 on actuators with NAMUR rib according to IEC 60534-6 including fastening screw.

➔ See Fig. 12.

Order no.:	Aluminum, Ematal coating G ¼: **1400-6751** Aluminum ¼ NPT: **1400-9924**
Mounting interface:	Actuators with NAMUR rib according to IEC 60534-6/actuators with threaded connections
Pilot valve interface:	Pilot valves with NAMUR interface ¼“ according to VDI/VDE 3845
Description of functions:	The adapter plate is mounted between the actuator and pilot valve. The adapter plate is used to mount the pilot valve to the NAMUR rib according to IEC 60534-6 and to integrate it into the pipeline using the connecting thread.
Logic symbol:	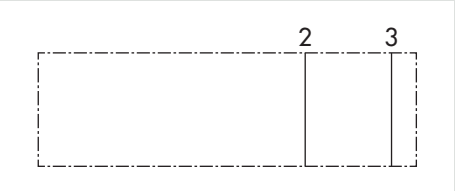

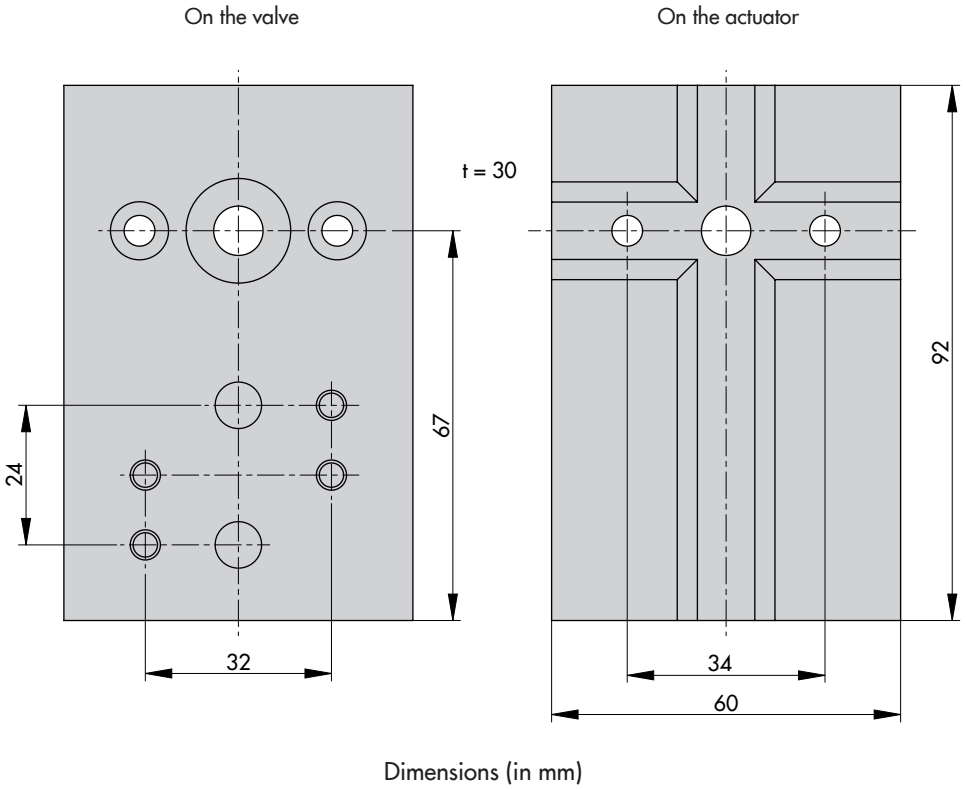

Fig. 12: *Adapter plate to mount a Type 3967 Solenoid Valve on a linear actuator*

2.10 Adapter plate with NAMUR interface ½“ on NAMUR rib

Adapter plate with threaded connections, made of aluminum/stainless steel, for pilot valves with NAMUR interface according to VDI/VDE 3845 on actuators with NAMUR rib according to IEC 60534-6 including fastening screw.

➔ See Fig. 13.

Order no.:	Aluminum G ½: **1402-0827** Aluminum ½ NPT: **1402-0829** Stainless steel G ½: **1402-0828** Stainless steel ½ NPT: **1402-0830**
Mounting interface:	Actuators with NAMUR rib according to IEC 60534-6/actuators with threaded connections
Pilot valve interface:	Pilot valves with NAMUR interface ½“ according to VDI/VDE 3845
Description of functions:	The adapter plate is mounted between the actuator and pilot valve. The adapter plate is used to mount the pilot valve to the NAMUR rib according to IEC 60534-6 and to integrate it into the pipeline using the connecting thread.
Logic symbol:	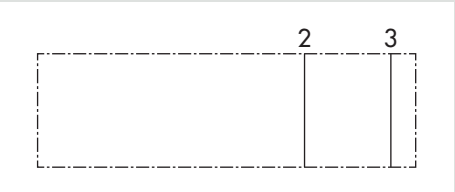

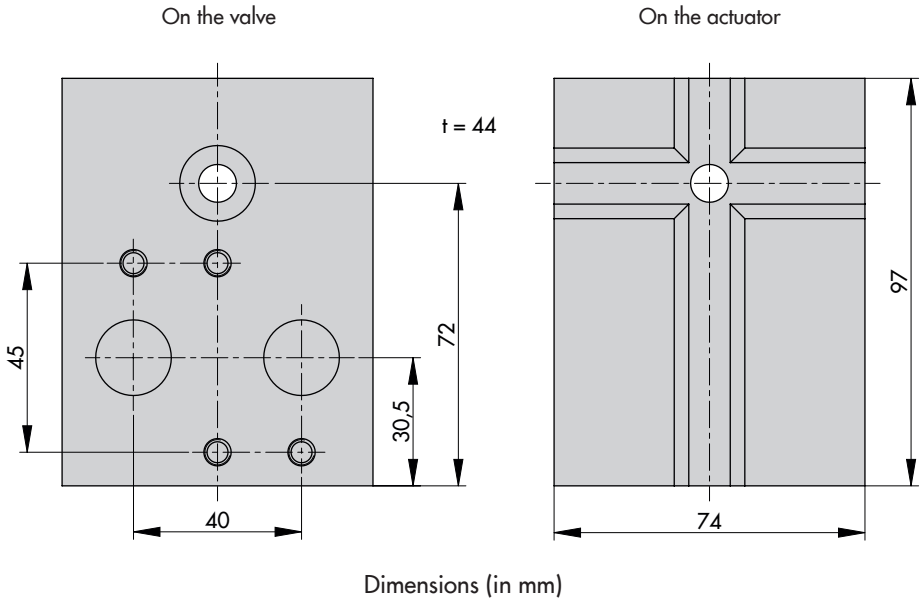

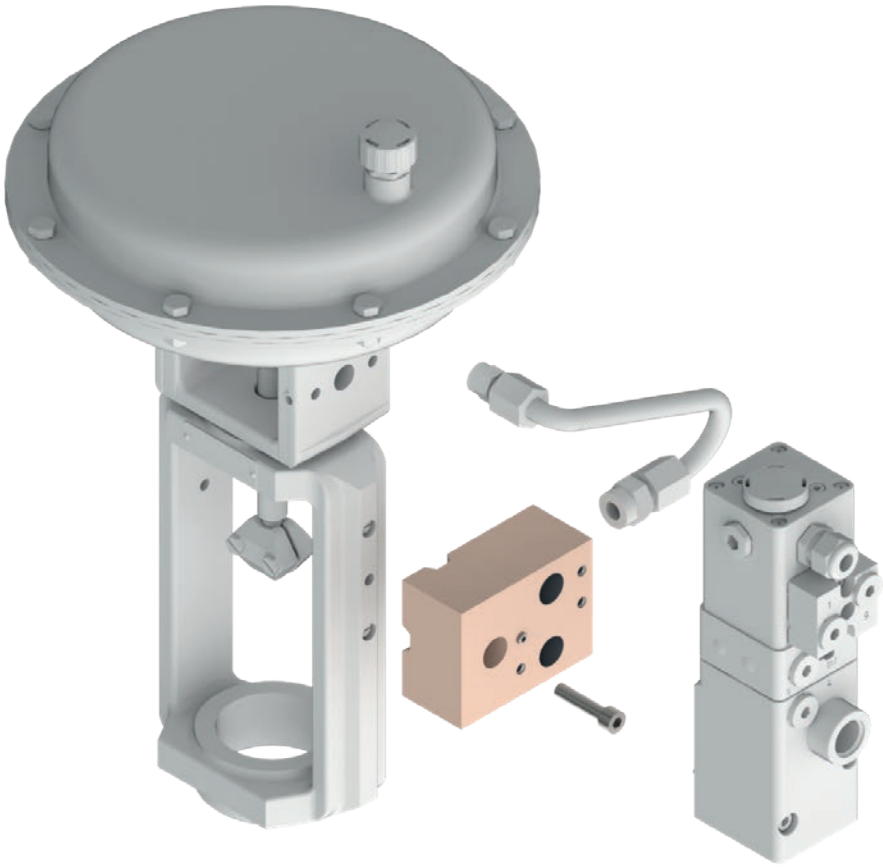

Fig. 13: *Adapter plate to mount a Type 3967 Solenoid Valve on a linear actuator*

2.11 Adapter plate with NAMUR interface ½“ on NAMUR rib with additional connections

Adapter plate with threaded connections, made of aluminum/stainless steel, for pilot valves with NAMUR interface according to VDI/VDE 3845 on actuators with NAMUR rib according to IEC 60534-6 including fastening screw.

➔ See Fig. 14.

Order no.:	Aluminum, Ematal coating G ½: **1402-1461** Stainless steel G ½: **1402-1462**
Mounting interface:	Actuators with NAMUR rib according to IEC 60534-6/actuators with threaded connections
Pilot valve interface:	Pilot valves with NAMUR interface ½“ according to VDI/VDE 3845
Description of functions:	The adapter plate is mounted between the actuator and pilot valve. The adapter plate is used to mount the pilot valve to the NAMUR rib according to IEC 60534-6 and to integrate it into the pipeline using the connecting thread. The adapter plate has additional ports and can be used for an optional exhaust air feedback of other valve accessories.
Logic symbol:	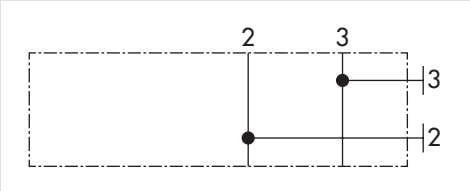

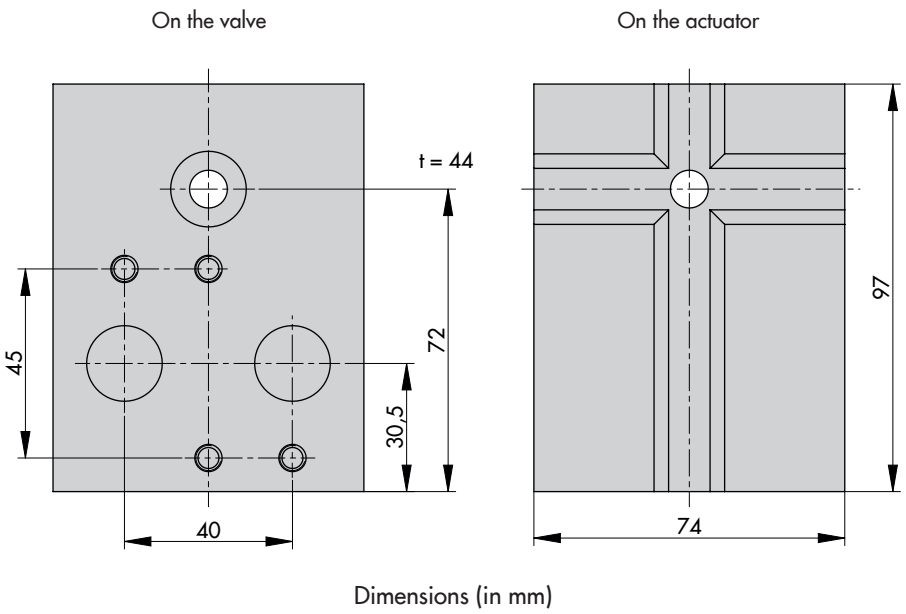

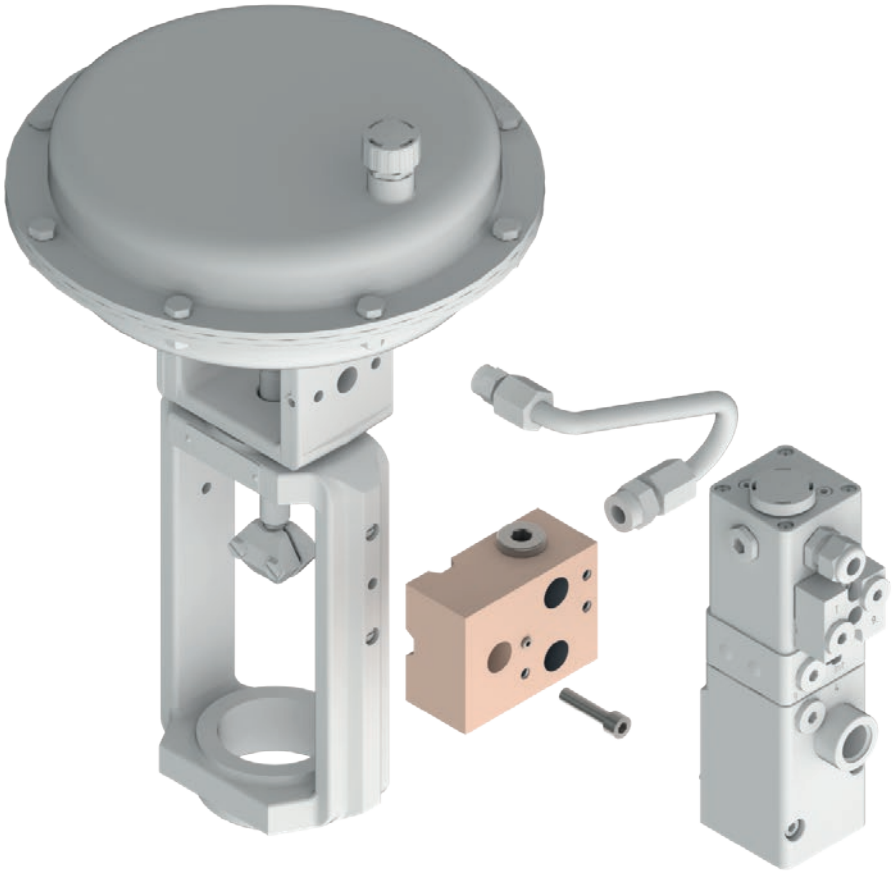

Fig. 14: *Adapter plate to mount a Type 3967 Solenoid Valve on a linear actuator*

2.12 Adapter plate with extended NAMUR interface ¼" for SAMSON Types 3353 and 3354 Valves

Adapter plate made of stainless steel, for pilot valves with NAMUR interface according to VDI/VDE 3845 or extended NAMUR interface according to VDI/VDE 3847 for mounting on SAMSON Types 3353 and 3354 Angle Seat Valves.

➔ See Fig. 15.

Order no.:	Stainless steel: **1409-3001** [1]
Mounting interface:	SAMSON Types 3353 and 3354 Angle Seat Valves
Pilot valve interface:	Pilot valves with NAMUR interface ¼" according to VDI/VDE 3845 or extended NAMUR interface ¼" according to VDI/VDE 3847
Description of functions:	The adapter plate is mounted between the actuator of the angle seat valve and the pilot valve. It routes the pneumatic connections of the actuator to an interface according to VDI/VDE 3845. It allows pilot valves with an interface according to VDI/VDE 3835 or VDI/VDE 3847 to be mounted without any piping between the actuator and pilot valve.

[1] The following parts are additionally required for pilot valves with extended NAMUR interface ¼" according to VDI/VDE 3847:
1x M5x6 screw (stainless steel 1.4404), order number 8333-1237
1x M5 seal (for M5x6 screw), order number 0790-6118

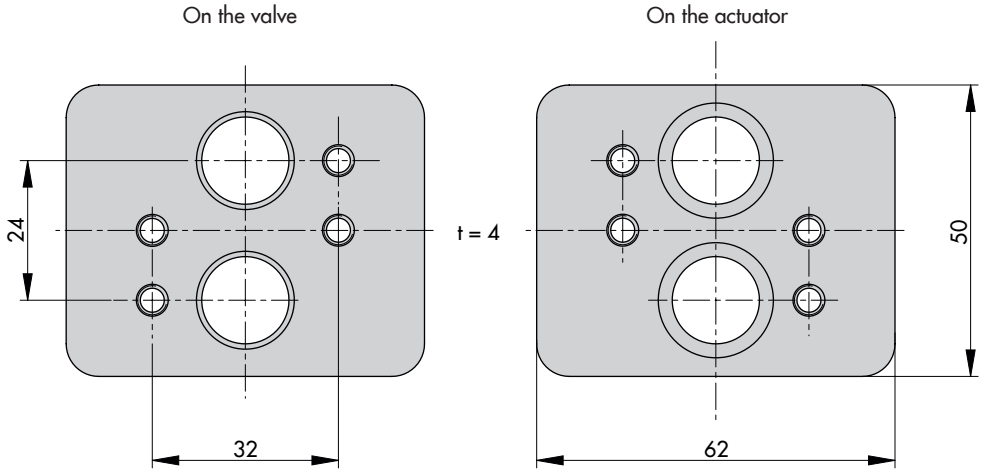

Dimensions (in mm)

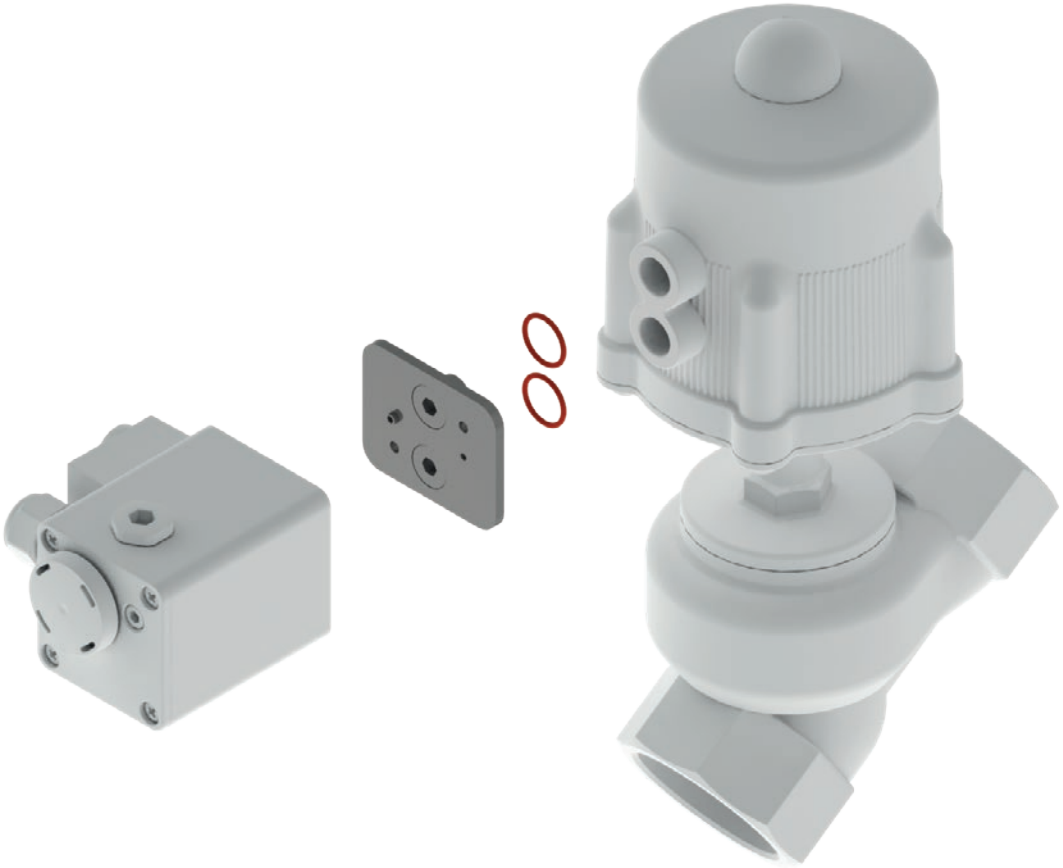

Fig. 15: *Adapter plate with Type 3967 Solenoid Valve on Type 3353 Angle Seat Valve*

2.13 Adapter plate with extended NAMUR interface ¼" for SAMSON Type 3351 On/off Valve

Adapter plate made of stainless steel, for pilot valves with NAMUR interface according to VDI/VDE 3845 or VDI/VDE 3847 for mounting on SAMSON Type 3351 On/off Valve.

➔ See Fig. 16.

Order no.:	Stainless steel: **1400-9638** [1)] Stainless steel: **1402-0095** [2)]
Mounting interface:	SAMSON Type 3351 On/off Valve
Pilot valve interface:	Pilot valves with NAMUR interface ¼" according to VDI/VDE 3845 or extended NAMUR interface ¼" according to VDI/VDE 3847
Description of functions:	The adapter plate is mounted between the actuator of the on/off valve and the pilot valve. It routes the pneumatic connections of the actuator to an interface according to VDI/VDE 3845. It allows pilot valves with an interface according to VDI/VDE 3845 or VDI/VDE 3847 to be mounted without any piping between the actuator and pilot valve.

1) For pilot valves with extended NAMUR interface ¼" according to VDI/VDE 3847
2) Pilot valves with NAMUR interface ¼" according to VDI/VDE 3845

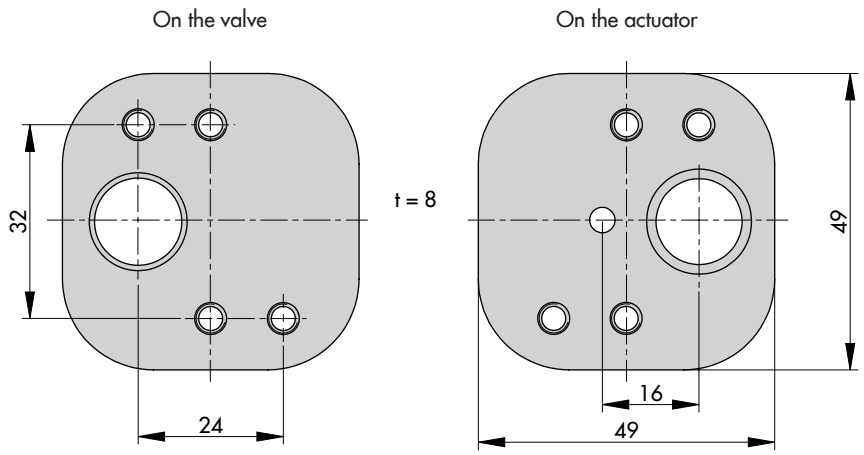

Dimensions (in mm)

Fig. 16: *Adapter plate to mount a Type 3967 Solenoid Valve on Type 3351 On/off Valve*

3 Double-axial adapters

SAMSON's modular double-axial adapters are mounted between the actuator and pilot valve. They are used to adapt the mounting position of the pilot valve by turning the interface.

The pilot air ducts of the double-axial adapters with extended NAMUR interface according to VDI/VDE 3847 are also diverted correspondingly.

3.1 Double-axial adapter 180° with extended NAMUR interface ¼“

Double-axial adapter made of aluminum, for pilot valves with NAMUR interface according to VDI/VDE 3845 or VDI/VDE 3847 on actuators with NAMUR interface according to VDI/VDE 3845 or integral attachment according to VDI/VDE 3847 including fastening screws and seals.

➔ See Fig. 17.

Order no.:	Aluminum: **1402-0280**
Mounting interface:	Actuators with interface according to VDI/VDE 3845 (¼“) or integral attachment according to VDI/VDE 3847 interface (¼“)
Pilot valve interface:	Pilot valves with NAMUR interface ¼“ according to VDI/VDE 3845 or extended NAMUR interface ¼“ according to VDI/VDE 3847
Description of functions:	The double-axial adapter is mounted between the actuator and pilot valve. The double-axial adapter is used to optimize the mounting position of the pilot valve by turning the interface by 180°.
Logic symbol:	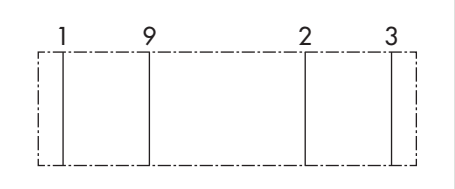

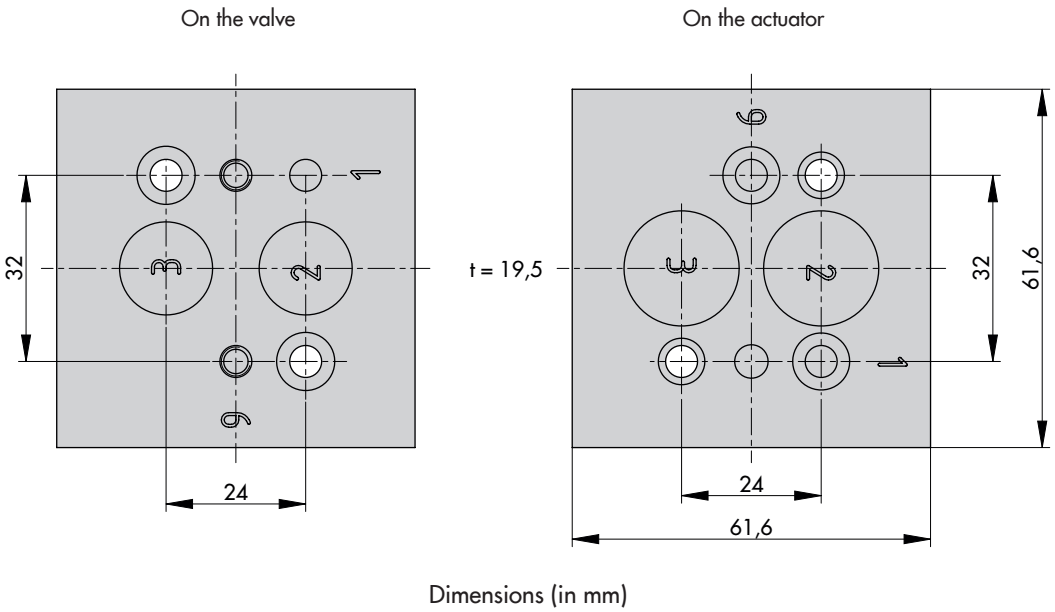

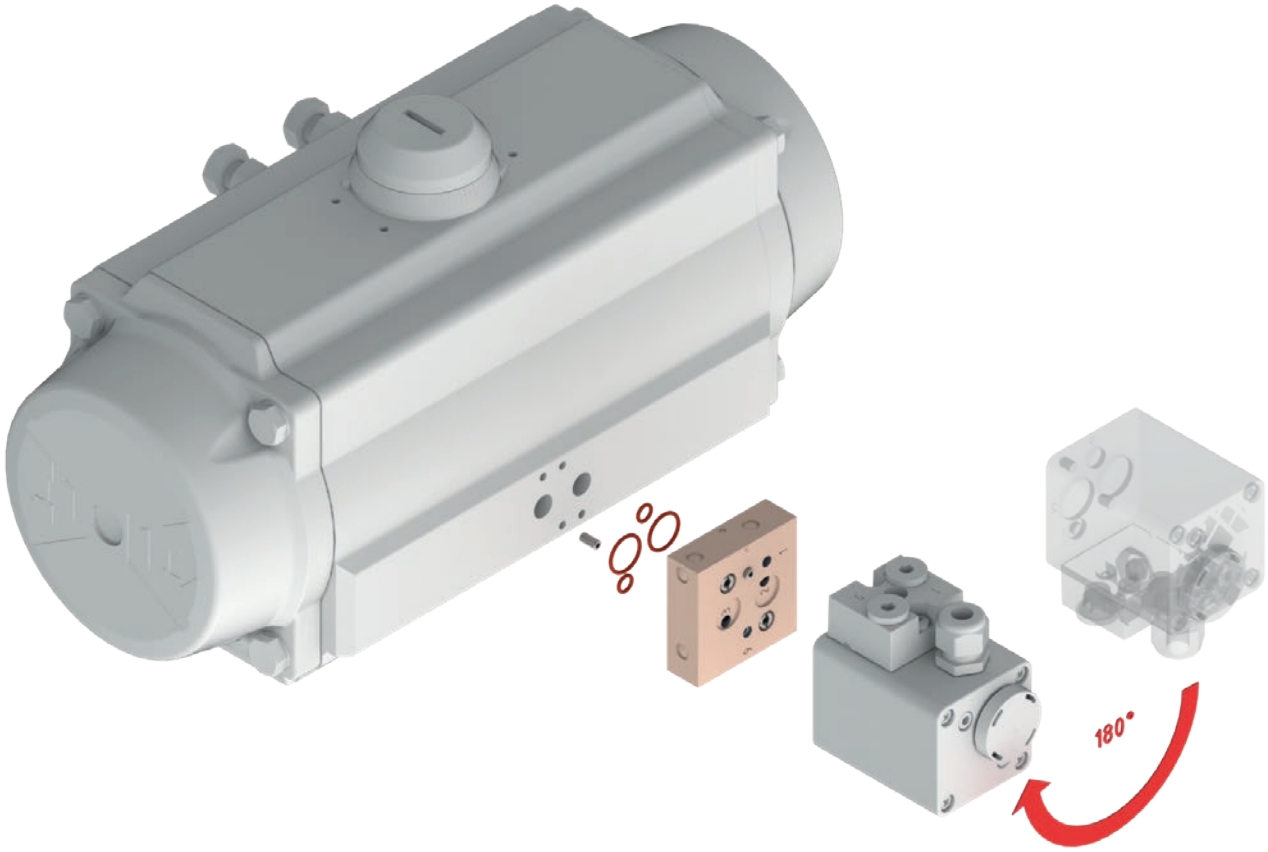

Fig. 17: *Double-axial adapter to mount a Type 3967 Solenoid Valve on a rotary actuator*

3.2 Double-axial adapter 90° with NAMUR interface ½“

Double-axial adapter made of aluminum/stainless steel, for pilot valves with NAMUR interface according to VDI/VDE 3845 on actuators with NAMUR interface according to VDI/VDE 3845 including fastening screws and seals.

➔ See Fig. 18.

Order no.:	Aluminum: **1402-0602** Stainless steel: **1402-0603**
Mounting interface:	Actuators with VDI/VDE 3845 interface ½“
Pilot valve interface:	Pilot valves with NAMUR interface ½“ according to VDI/VDE 3845
Description of functions:	The double-axial adapter is mounted between the actuator and pilot valve. The double-axial adapter is used to optimize the mounting position of the pilot valve by turning the interface by 90°.
Logic symbol:	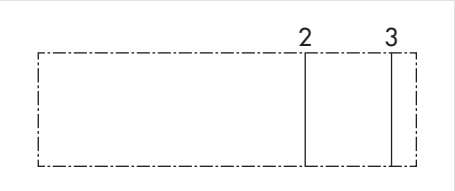

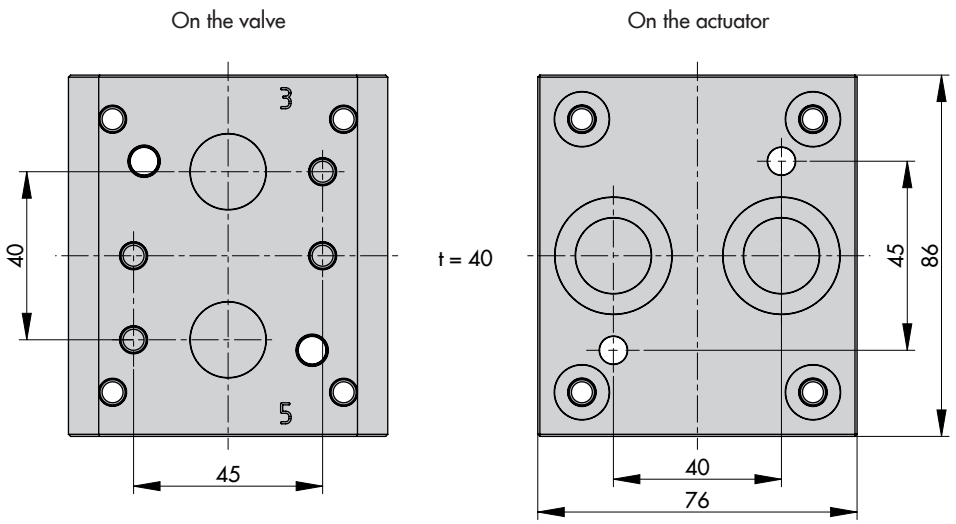

Dimensions (in mm)

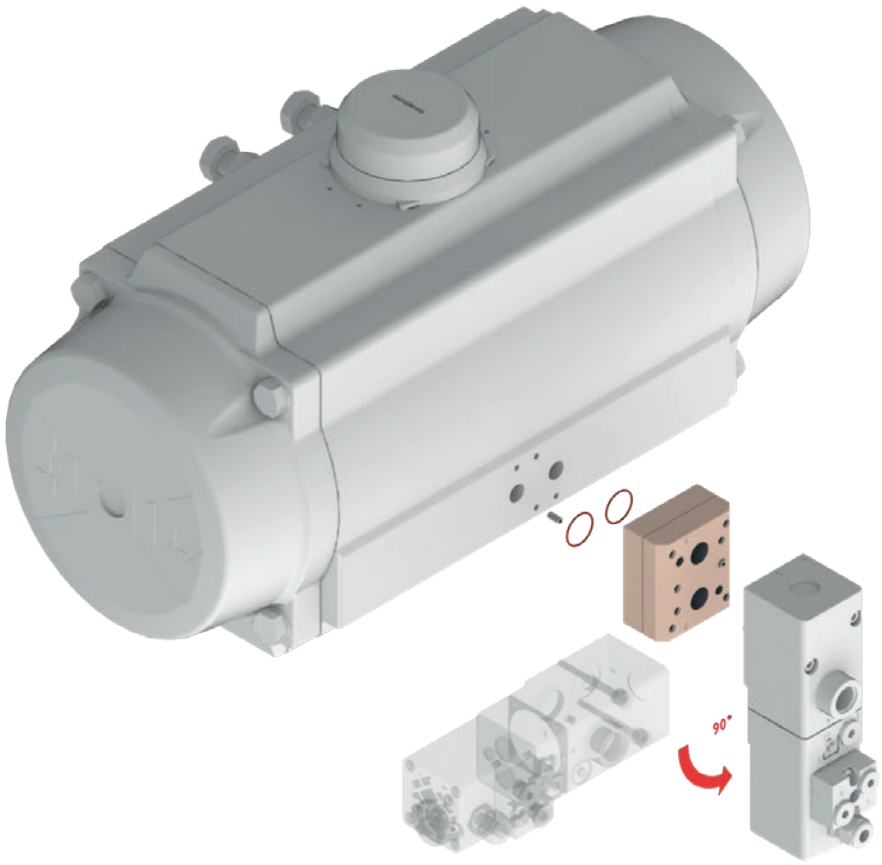

Fig. 18: *Double-axial adapter to mount a Type 3967 Solenoid Valve on a rotary actuator*

3.3 Double-axial adapter 90° with NAMUR interface ½" with additional threaded connections

Double-axial adapter made of aluminum/stainless steel, for pilot valves with NAMUR interface according to VDI/VDE 3845 on actuators with NAMUR interface according to VDI/VDE 3845 including fastening screws and seals.

➔ See Fig. 19.

Order no.:	Aluminum, Ematal coating G ½: **1402-1662** Stainless steel G ½: **1402-1663**
Mounting interface:	Actuators with VDI/VDE 3845 interface ½"
Pilot valve interface:	Pilot valves with NAMUR interface ½" according to VDI/VDE 3845
Description of functions:	The double-axial adapter is mounted between the actuator and pilot valve. The double-axial adapter is used to optimize the mounting position of the pilot valve by turning the interface by 90°. The double-axial adapter has additional threaded ports (G ½) and can be used for an optional exhaust air feedback of other valve accessories.
Logic symbol:	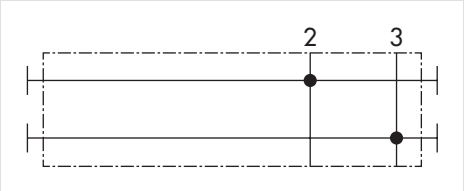

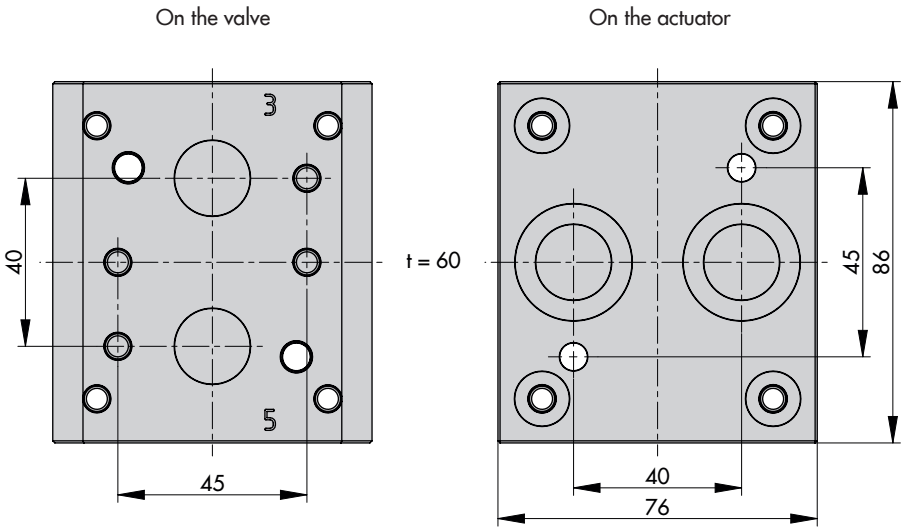

Dimensions (in mm)

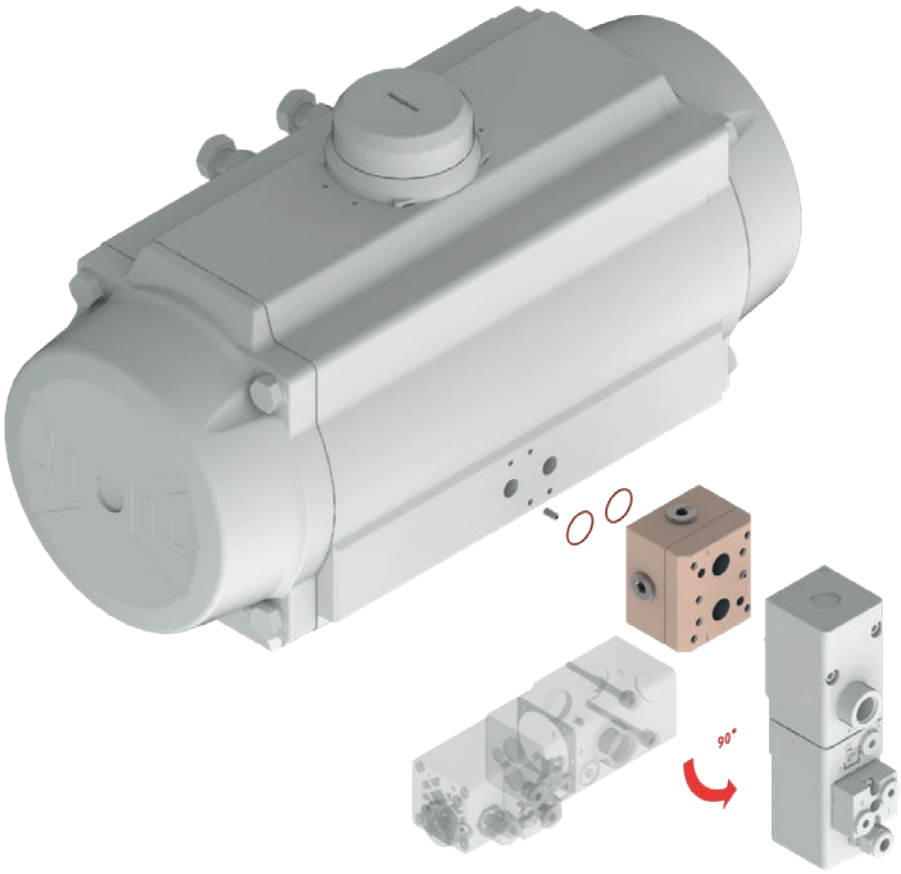

Fig. 19: *Double-axial adapter to mount a Type 3967 Solenoid Valve on a rotary actuator*

4 Restrictor plates

SAMSON's modular restrictor plates are mounted between the actuator and pilot valve. They allow the opening and/or closing times of the actuator to be adjusted by restricting the corresponding air flow rate.

4.1 Fine exhaust air restrictor for extended NAMUR interface ¼“

Restrictor plate for restricting the exhaust air flow based on the pressure, made of aluminum, for pilot valves with NAMUR interface according to VDI/VDE 3845 or VDI/VDE 3847 on actuators with NAMUR interface according to VDI/VDE 3845 or integral attachment with VDI/VDE 3847 interface including fastening screws and seals.

➔ See Fig. 22.

Order no.:	Aluminum with Ematal coating: 100200804 Aluminum with Ematal coating **SIL**: 100200805 [1)]
Mounting interface:	Actuators with interface according to VDI/VDE 3845 (¼“) or integral attachment according to VDI/VDE 3847 interface (¼“)
Pilot valve interface:	Pilot valves with NAMUR interface ¼“ according to VDI/VDE 3845 or extended NAMUR interface ¼“ according to VDI/VDE 3847
Description of functions:	The restrictor plate is mounted between the actuator and pilot valve. This restrictor plate allows the closing time of the actuator to be adjusted by restricting the flow rate of the exhaust air within the range from K_{VS} 0 to 0.27 (K_{VS} 0.002 to 0.27 for SIL-approved restrictors [1)]) at 6 bar.
Logic symbol:	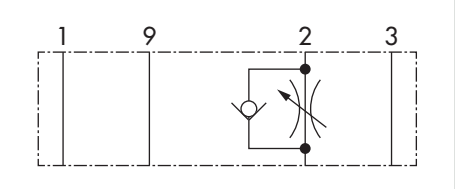

1) Suitable for use in safety-instrumented systems (SIL) according to IEC 61508 observing the SIL suitability of the solenoid valve/restrictor plate assembly

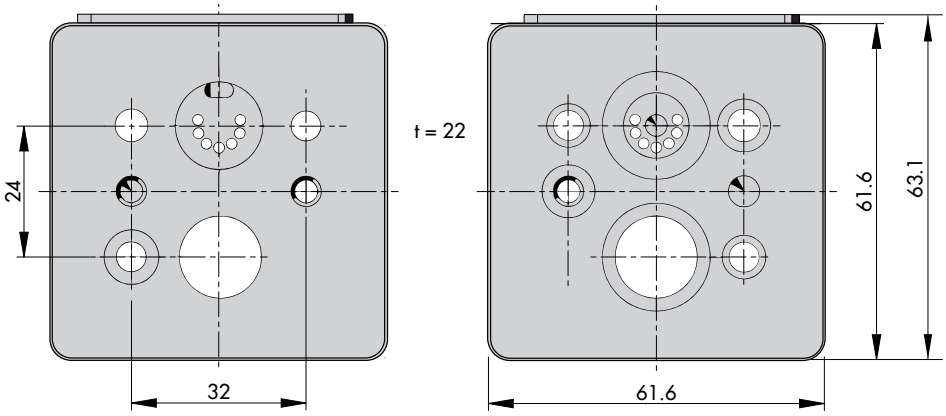

Dimensions (in mm)

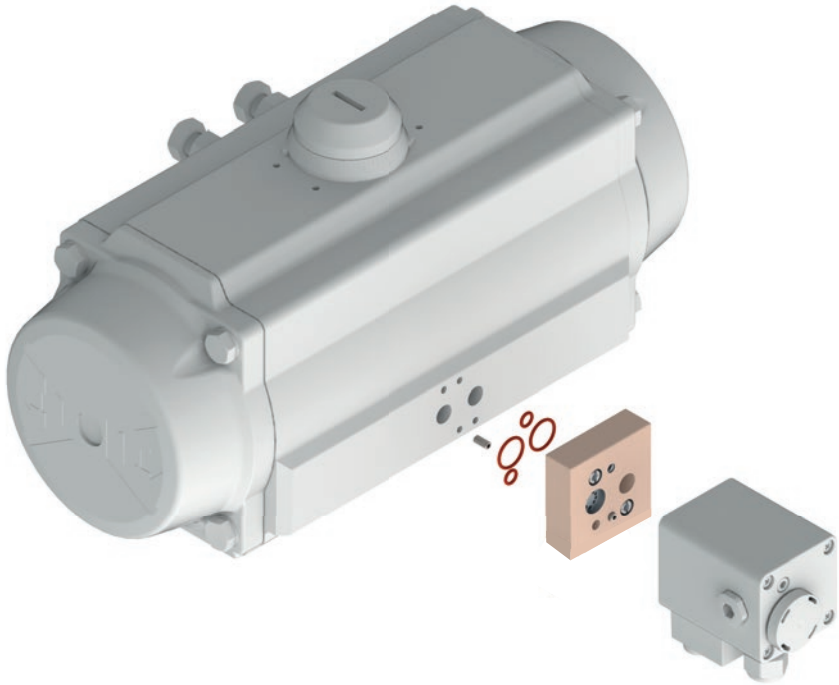

Fig. 20: *Restrictor plate to mount a Type 3967 Solenoid Valve on a rotary actuator*

4.2 Fine supply air restrictor of extended NAMUR interface ¼“

Restrictor plate for restricting the supply air flow based on the pressure, made of aluminum, for pilot valves with NAMUR interface according to VDI/VDE 3845 or VDI/VDE 3847 on actuators with NAMUR interface according to VDI/VDE 3845 or integral attachment with VDI/VDE 3847 interface including fastening screws and seals.

➔ See Fig. 23.

Order no.:	Aluminum with Ematal coating: 100200806 Aluminum with Ematal coating **SIL**: 100200807 [1)]
Mounting interface:	Actuators with interface according to VDI/VDE 3845 (¼“) or integral attachment according to VDI/VDE 3847 interface (¼“)
Pilot valve interface:	Pilot valves with NAMUR interface ¼“ according to VDI/VDE 3845 or extended NAMUR interface ¼“ according to VDI/VDE 3847
Description of functions:	The restrictor plate is mounted between the actuator and pilot valve. This restrictor plate allows the opening time of the actuator to be adjusted by restricting the flow rate of the supply air within the range from K_{VS} 0 to 0.27 (K_{VS} 0.002 to 0.27 for SIL-approved restrictors [1)]) at 6 bar.
Logic symbol:	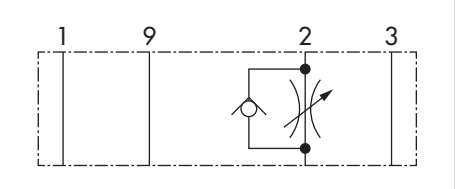

[1)] Suitable for use in safety-instrumented systems (SIL) according to IEC 61508 observing the SIL suitability of the solenoid valve/restrictor plate assembly

i ***Note***

The reduction of the air supply may cause a stick-slip effect in the actuator.

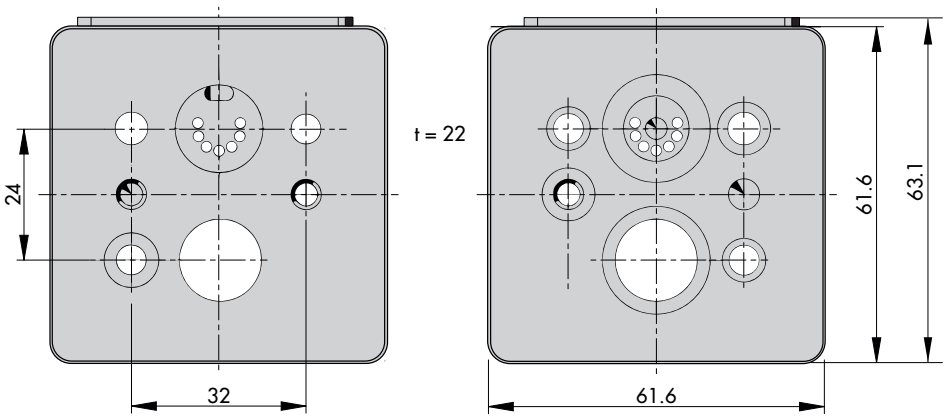

Dimensions (in mm)

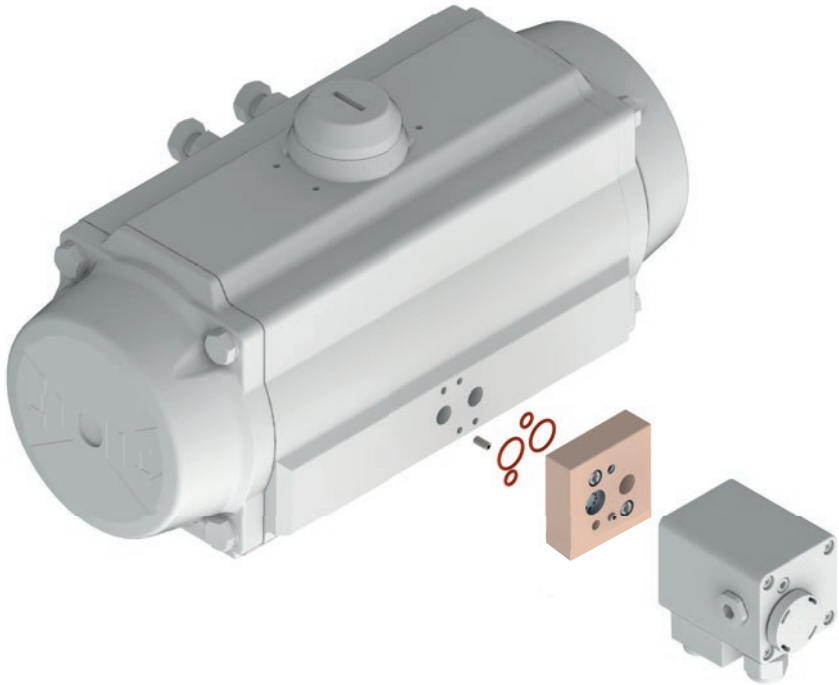

Fig. 21: *Restrictor plate to mount a Type 3967 Solenoid Valve on a rotary actuator*

4.3 Exhaust air restrictor for extended NAMUR interface ¼“

Restrictor plate for restricting the exhaust air flow based on the pressure, made of aluminum/stainless steel, for pilot valves with NAMUR interface according to VDI/VDE 3845 or VDI/VDE 3847 on actuators with NAMUR interface according to VDI/VDE 3845 or integral attachment with VDI/VDE 3847 interface including fastening screws and seals.

➔ See Fig. 22.

Order no.:	Aluminum: 100200794 Aluminum **SIL**: 100200795 [1)] Stainless steel: 100200796 Stainless steel **SIL**: 100200797 [1)]
Mounting interface:	Actuators with interface according to VDI/VDE 3845 (¼“) or integral attachment according to VDI/VDE 3847 interface (¼“)
Pilot valve interface:	Pilot valves with NAMUR interface ¼“ according to VDI/VDE 3845 or extended NAMUR interface ¼“ according to VDI/VDE 3847
Description of functions:	The restrictor plate is mounted between the actuator and pilot valve. This restrictor plate allows the closing time of the actuator to be adjusted by restricting the flow rate of the exhaust air within the range from K_{VS} 0 to 0.28 (K_{VS} 0.01 to 0.28 for SIL-approved restrictors [1)]) at 6 bar.
Logic symbol:	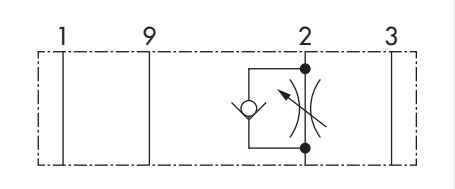

[1)] Suitable for use in safety-instrumented systems (SIL) according to IEC 61508 observing the SIL suitability of the solenoid valve/restrictor plate assembly

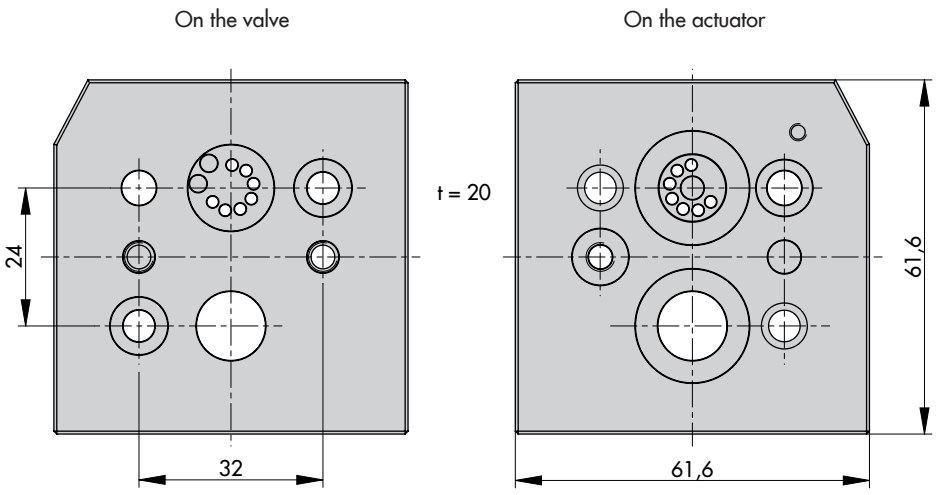

Dimensions (in mm)

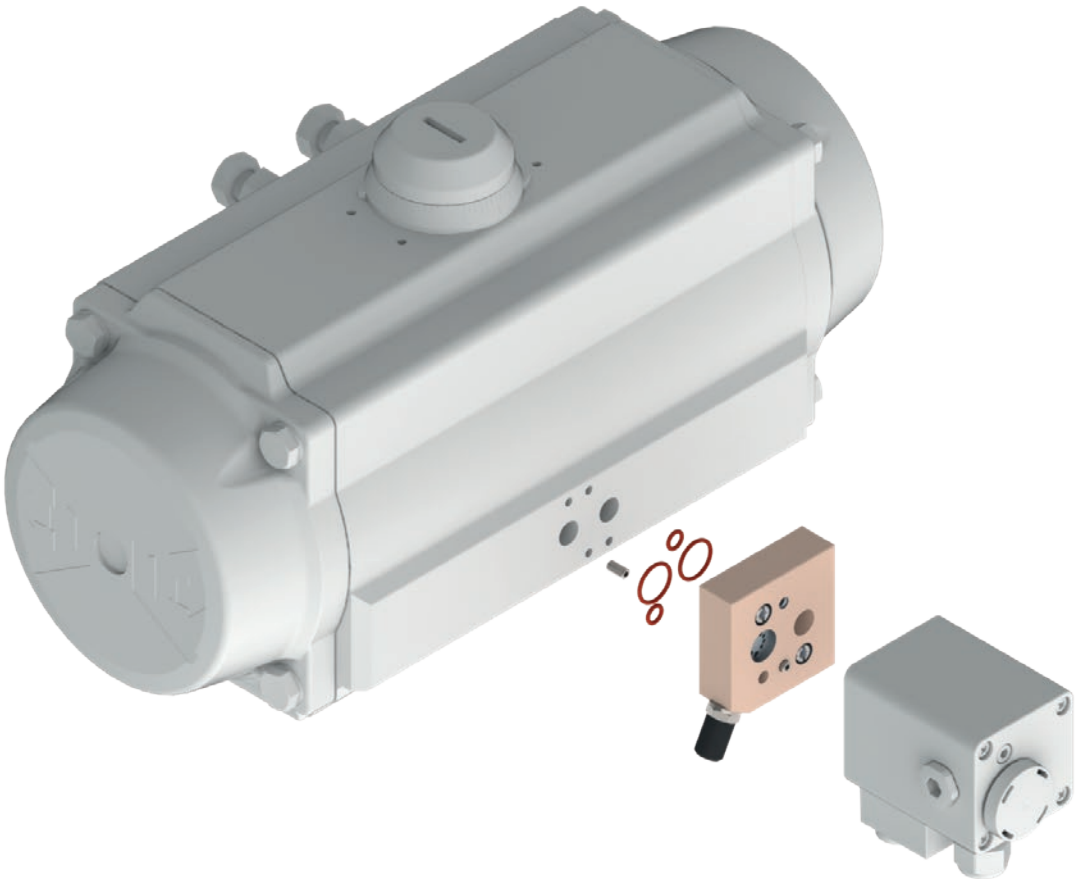

Fig. 22: *Restrictor plate to mount a Type 3967 Solenoid Valve on a rotary actuator*

4.4 Supply air restrictor of extended NAMUR interface ¼“

Restrictor plate for restricting the supply air flow based on the pressure, made of aluminum/stainless steel, for pilot valves with NAMUR interface according to VDI/VDE 3845 or VDI/VDE 3847 on actuators with NAMUR interface according to VDI/VDE 3845 or integral attachment with VDI/VDE 3847 interface including fastening screws and seals.

➔ See Fig. 23.

Order no.:	Aluminum: 100200790 Aluminum **SIL**: 100200791 [1)] Stainless steel: 100200792 Stainless steel **SIL**: 100200793 [1)]
Mounting interface:	Actuators with interface according to VDI/VDE 3845 (¼“) or integral attachment according to VDI/VDE 3847 interface (¼“)
Pilot valve interface:	Pilot valves with NAMUR interface ¼“ according to VDI/VDE 3845 or extended NAMUR interface ¼“ according to VDI/VDE 3847
Description of functions:	The restrictor plate is mounted between the actuator and pilot valve. This restrictor plate allows the opening time of the actuator to be adjusted by restricting the flow rate of the supply air within the range from K_{VS} 0 to 0.28 (K_{VS} 0.01 to 0.28 for SIL-approved restrictors [1)]) at 6 bar.
Logic symbol:	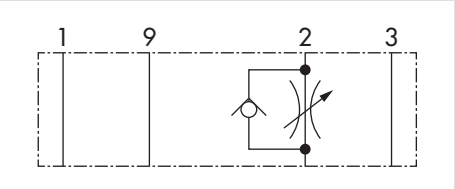

[1)] Suitable for use in safety-instrumented systems (SIL) according to IEC 61508 observing the SIL suitability of the solenoid valve/restrictor plate assembly

i ***Note***

The reduction of the air supply may cause a stick-slip effect in the actuator.

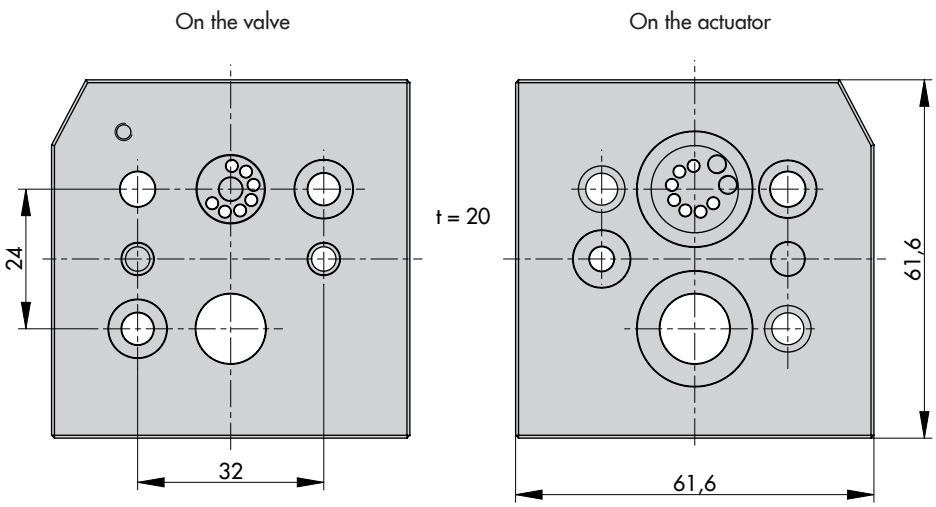

Dimensions (in mm)

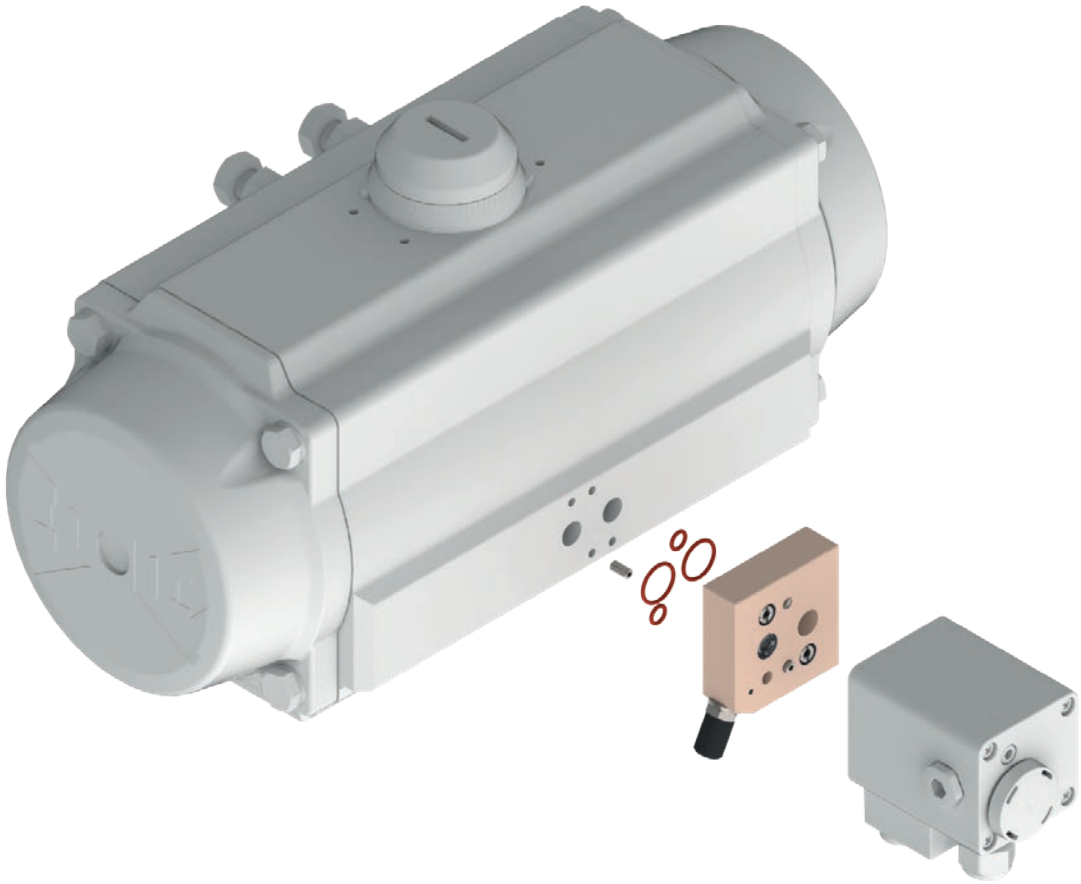

Fig. 23: *Restrictor plate to mount a Type 3967 Solenoid Valve on a rotary actuator*

4.5 Double exhaust air restrictor with extended NAMUR interface ¼“

Restrictor plate for restricting the exhaust air flow based on the pressure, made of aluminum/stainless steel, for pilot valves with NAMUR interface according to VDI/VDE 3845 or VDI/VDE 3847 on actuators with NAMUR interface according to VDI/VDE 3845 or integral attachment with VDI/VDE 3847 interface including fastening screws and seals.

➔ See Fig. 24.

Order no.:	Aluminum: 100200798 Aluminum **SIL**: 100200799 [1)] Stainless steel: 100200800 Stainless steel **SIL**: 100200801 [1)]
Mounting interface:	Actuators with interface according to VDI/VDE 3845 (¼“) or integral attachment according to VDI/VDE 3847 interface (¼“)
Pilot valve interface:	Pilot valves with NAMUR interface ¼“ according to VDI/VDE 3845 or extended NAMUR interface ¼“ according to VDI/VDE 3847
Description of functions:	The restrictor plate is mounted between the actuator and pilot valve. This restrictor plate allows the opening or closing time of a double-acting actuator to be adjusted by restricting the flow rate of both exhaust air flows within the range from K_{VS} 0 to 0.28 (K_{VS} 0.01 to 0.28 for SIL-approved restrictors [1)]) at 6 bar.
Logic symbol:	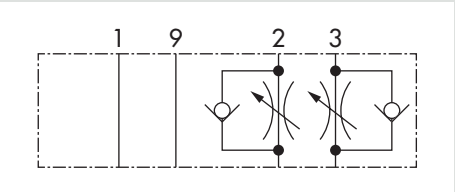

[1)] Suitable for use in safety-instrumented systems (SIL) according to IEC 61508 observing the SIL suitability of the solenoid valve/restrictor plate assembly

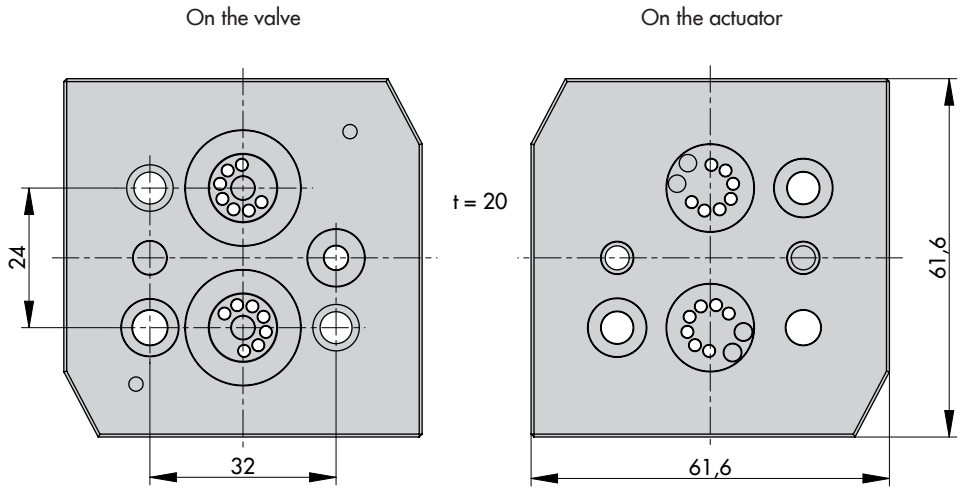

Dimensions (in mm)

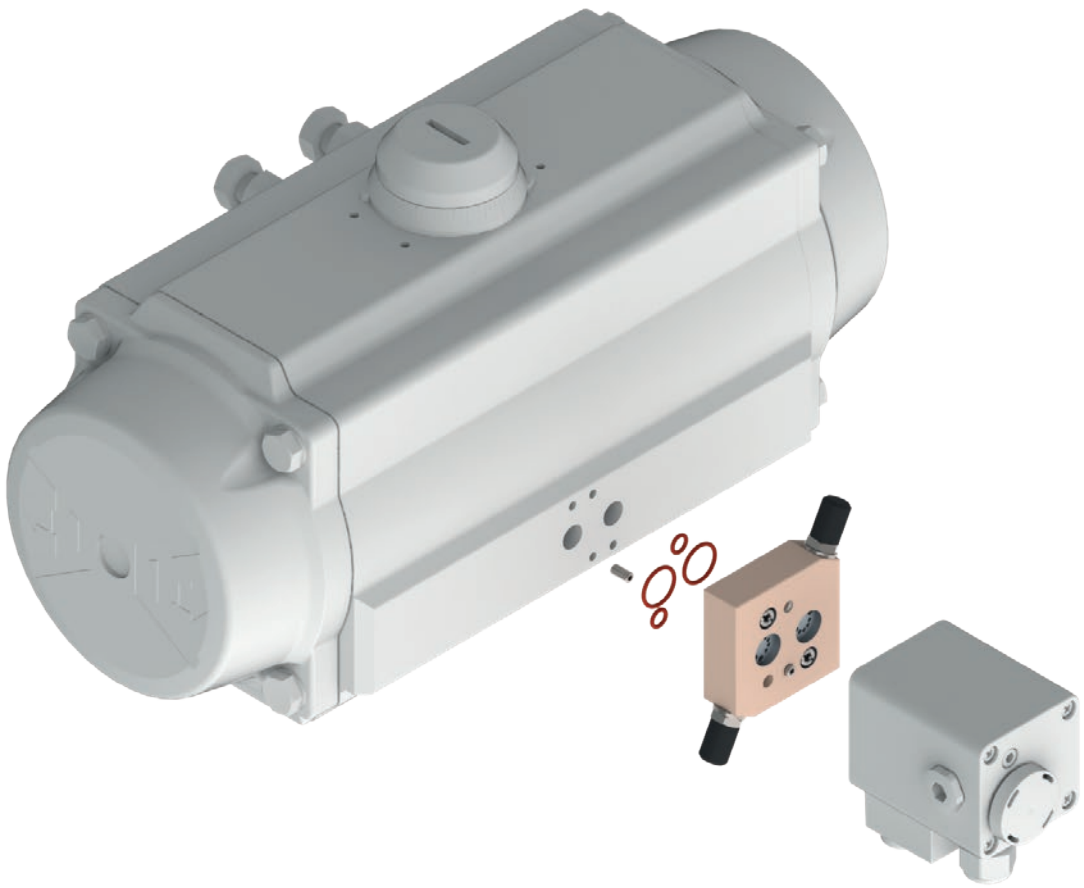

Fig. 24: *Restrictor plate to mount a Type 3967 Solenoid Valve on a rotary actuator*

4.6 Universal restrictor with extended NAMUR interface ¼“

Restrictor plate for restricting the air flow based on the pressure, made of aluminum/stainless steel, for pilot valves with NAMUR interface according to VDI/VDE 3845 or VDI/VDE 3847 on actuators with NAMUR interface according to VDI/VDE 3845 or integral attachment with VDI/VDE 3847 interface including fastening screws and seals.

➔ See Fig. 25.

Order no.:	Aluminum **SIL**: 100200802 [1)] Stainless steel **SIL**: 100200803 [1)]
Mounting interface:	Actuators with interface according to VDI/VDE 3845 (¼“) or integral attachment according to VDI/VDE 3847 interface (¼“)
Pilot valve interface:	Pilot valves with NAMUR interface ¼“ according to VDI/VDE 3845 or extended NAMUR interface ¼“ according to VDI/VDE 3847
Description of functions:	The restrictor plate is mounted between the actuator and pilot valve. This restrictor plate allows the opening or closing time of a double-acting actuator to be adjusted by restricting the flow rate of the supply air within the range from K_{VS} 0.01 to 0.28 at 6 bar. The actuator chamber (port 2 or 4) that is restricted can be changed by turning the restrictor plate by 180°.
Logic symbol:	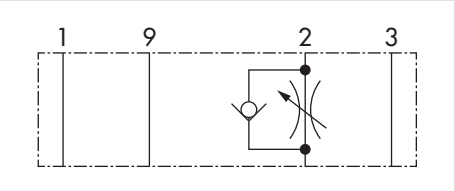

[1)] Suitable for use in safety-instrumented systems (SIL) according to IEC 61508 observing the requirements in the Manufacturer's Declaration No. 1296 and Safety Manual ▶ SH 3967-2

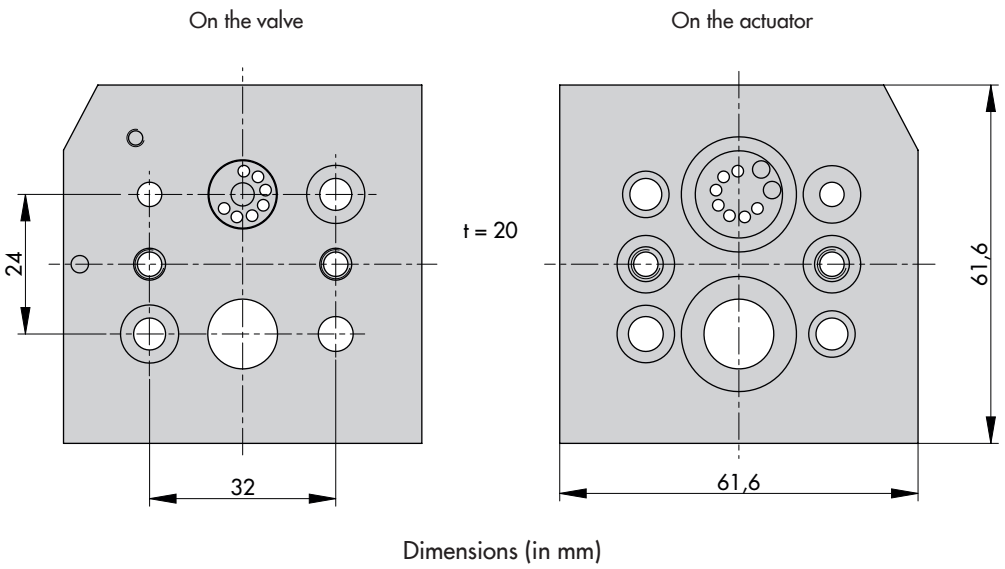

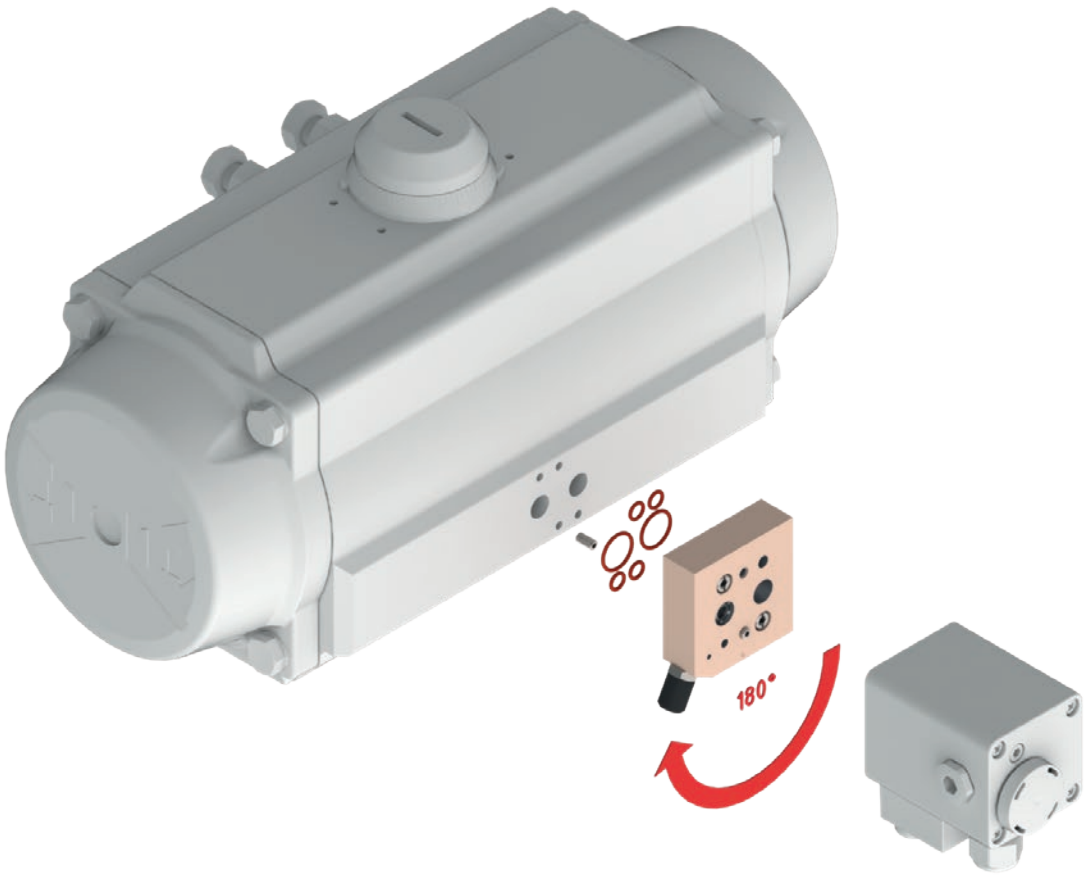

Fig. 25: *Restrictor plate to mount a Type 3967 Solenoid Valve on a rotary actuator*

5 Special constructions

SAMSON's modular special constructions make it possible to use solenoid valves in special engineered cases. Special constructions include redundancy plates, an adapter plate for operating several solenoid valves using a single air supply as well as an adapter plate to implement the closed-circuit principle.

5.1 Emergency supply · NAMUR interface ¼", integrated parallel connection – 2oo2

Adapter plate made of aluminum/stainless steel, for pilot valves with NAMUR interface according to VDI/VDE 3847 on actuators with NAMUR interface according to VDI/VDE 3845 including fastening screws and seals.

➔ See Fig. 26.

Order no.:	Aluminum, Ematal coating	G ¼:	**1402-0007**
	Aluminum	¼ NPT:	**1402-0009**
	Stainless steel	G ¼:	**1402-0008**
	Stainless steel	¼ NPT:	**1402-0010**
Mounting interface:	Actuators with VDI/VDE 3845 interface ¼"		
Pilot valve interface:	Pilot valves with extended NAMUR interface ¼" according to VDI/VDE 3847		
Description of functions:	The adapter plate is mounted between the actuator and pilot valve. The adapter plate is used to increase the availability through parallel connection of two pilot valves. The pilot valves are mounted to the left and right on the extended NAMUR interfaces according to VDI/VDE 3847. The adapter plate is fastened to the actuator using a third NAMUR interface according to VDI/VDE 3845.		
Logic symbol:	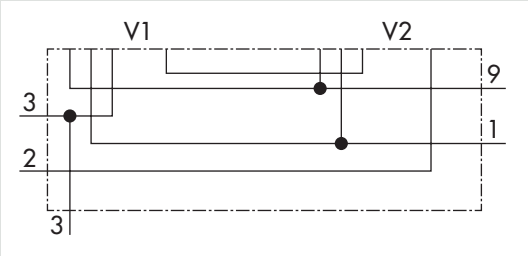		

i ***Note***

The pilot valve's venting at the connecting surface V2 of the adapter plate must be sealed.
Refer to TV-SK 9932 for a detailed mounting description.

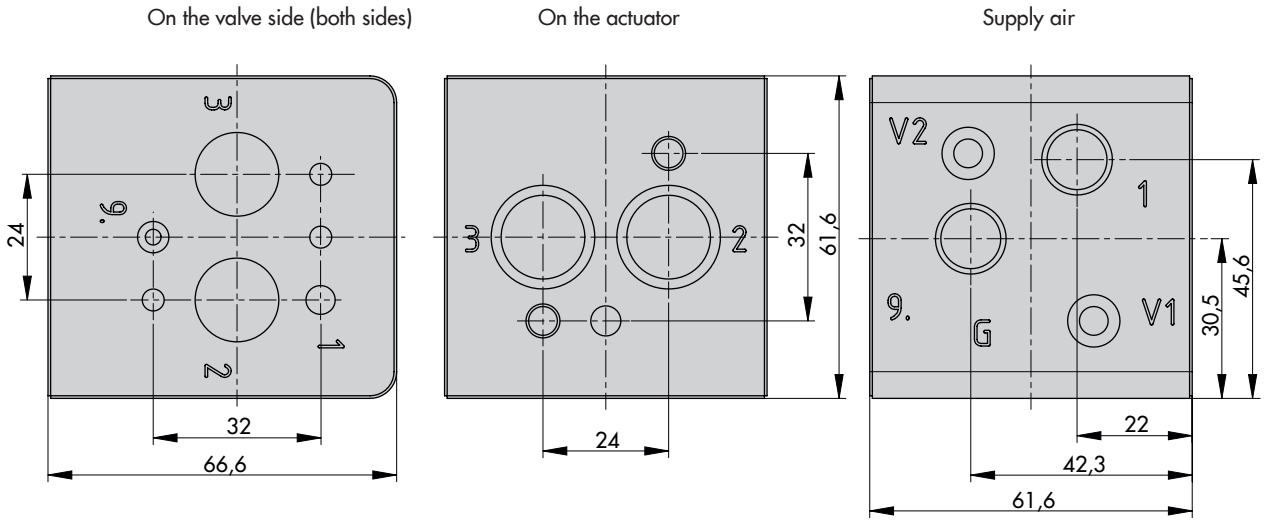

Dimensions (in mm)

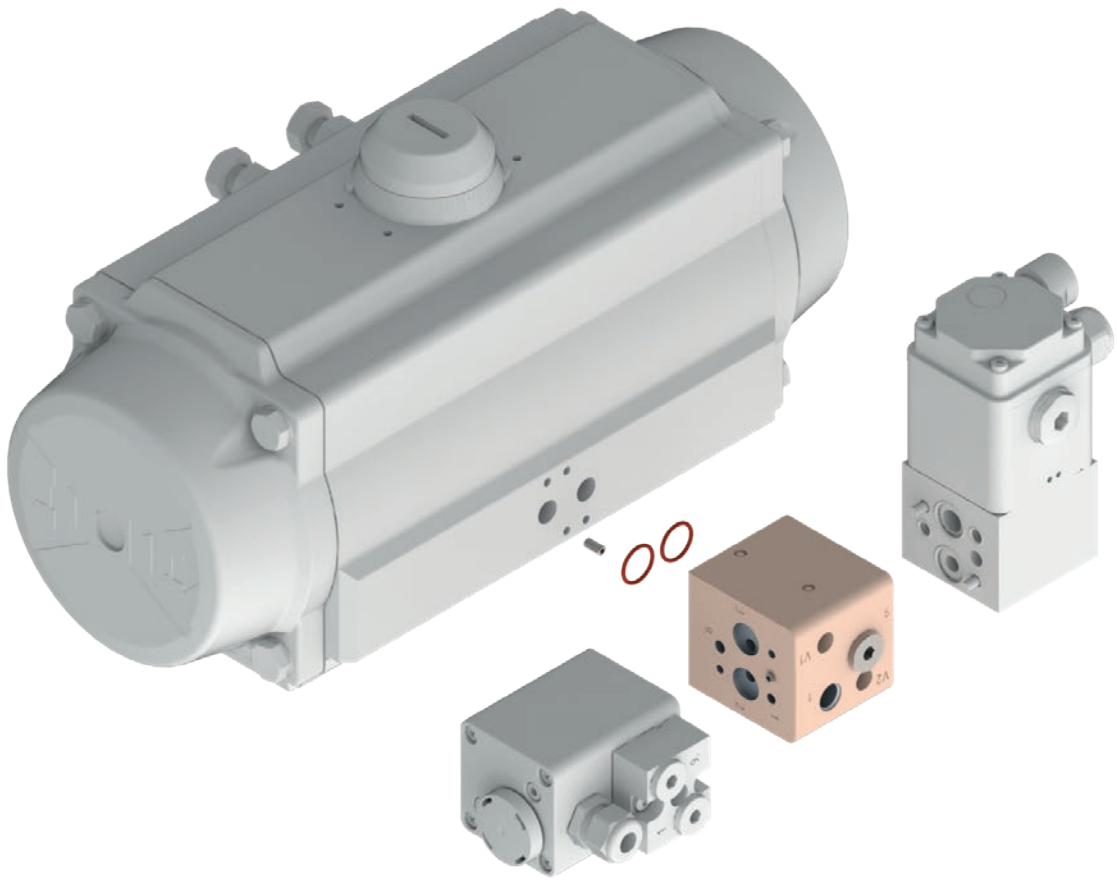

Fig. 26: *Adapter plate to mount a Type 3967 and Type 3963 Solenoid Valve on a rotary actuator*

5.2 Emergency venting · NAMUR interface ¼“, integrated series connection – 1oo2

Adapter plate made of aluminum/stainless steel, for pilot valves with NAMUR interface according to VDI/VDE 3847 on actuators with NAMUR interface according to VDI/VDE 3845 including fastening screws and seals.

➔ See Fig. 27.

Order no.:	Aluminum, Ematal coating	G ¼:	**1402-0011**
	Aluminum	¼ NPT:	**1402-0013**
	Stainless steel	G ¼:	**1402-0012**
	Stainless steel	¼ NPT:	**1402-0014**
Mounting interface:	Actuators with VDI/VDE 3845 interface ¼“		
Pilot valve interface:	Pilot valves with extended NAMUR interface ¼“ according to VDI/VDE 3847		
Description of functions:	The adapter plate is mounted between the actuator and pilot valve. The adapter plate is used to increase the safety through series connection of two pilot valves. The pilot valves are mounted to the left and right on the extended NAMUR interfaces according to VDI/VDE 3847. The adapter plate is fastened to the actuator using a third NAMUR interface according to VDI/VDE 3845.		

i ***Note***

The pilot valves at V1 and V2 interfaces of the adapter plate must have a venting.
Refer to TV-SK 9932 for a detailed mounting description.

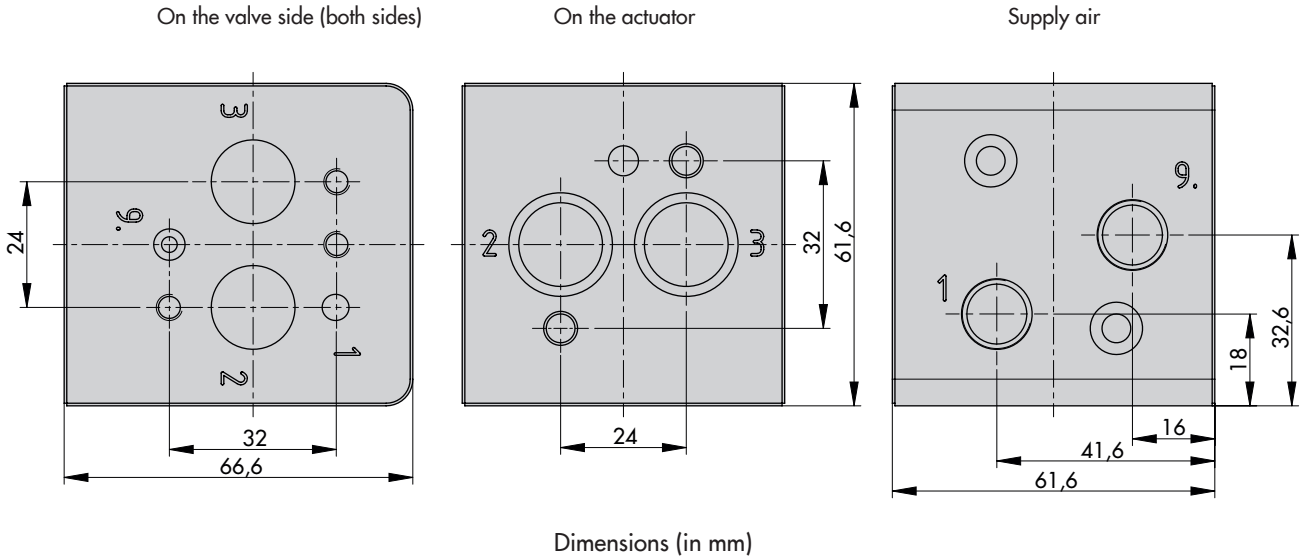

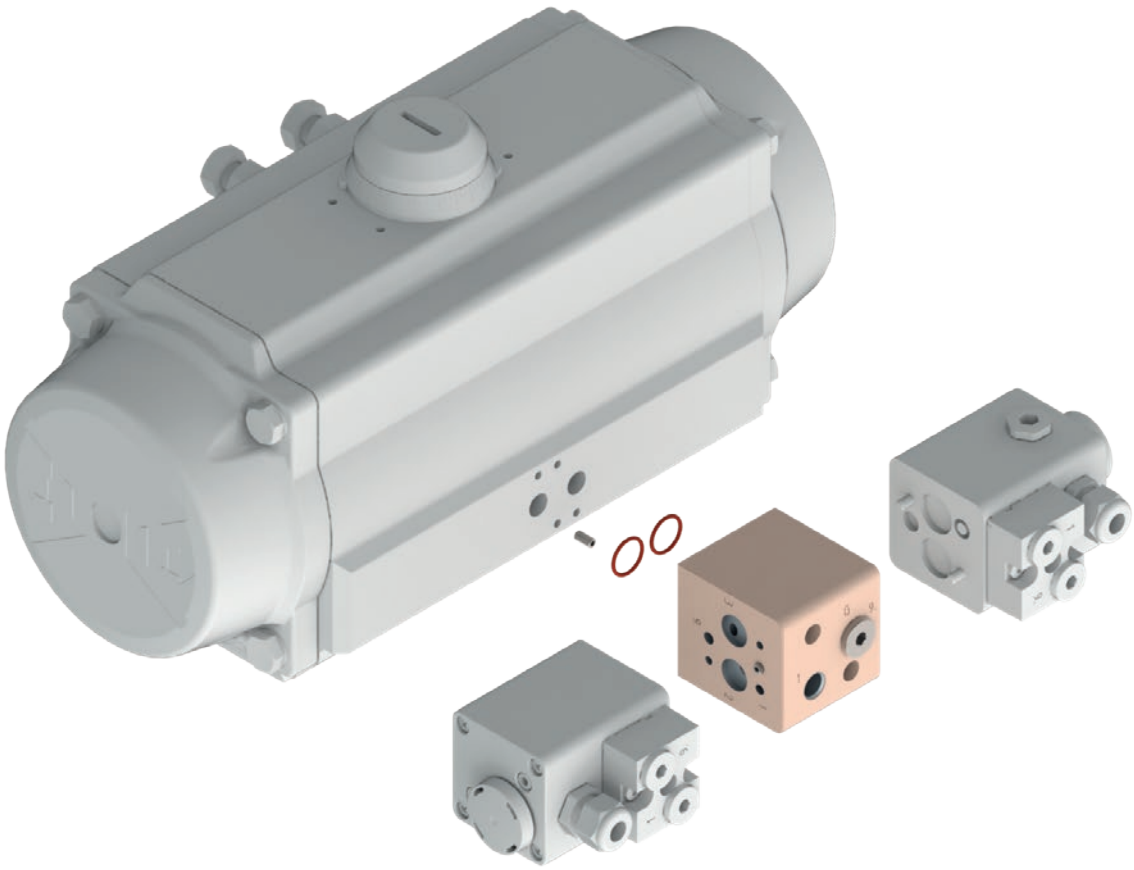

Fig. 27: *Adapter plate to mount two Type 3967 Solenoid Valves on a rotary actuator*

5.3 Emergency venting · Extended NAMUR interface ¼“, integrated series connection – 1oo2

Adapter plate made of aluminum, for pilot valves with NAMUR interface according to VDI/VDE 3847 on actuators with integral attachment according to VDI/VDE 3847 including fastening screws and seals.

➔ See Fig. 28.

Order no.:	Aluminum G ¼: **1402-1873**
Mounting interface:	Actuators with integral attachment with VDI/VDE 3847 interface (¼“)
Pilot valve interface:	Pilot valves with extended NAMUR interface ¼“ according to VDI/VDE 3847
Description of functions:	The adapter plate is mounted between the actuator and pilot valve. The adapter plate is used to increase the safety through series connection of two pilot valves. The pilot valves are mounted to the left and right on the extended NAMUR interfaces according to VDI/VDE 3847. The adapter plate is fastened to the actuator using integral attachment according to VDI/VDE 3847.

i ***Note***

The pilot valves at V1 and V2 interfaces of the adapter plate must have a venting.
Refer to TV-SK 9932 for a detailed mounting description.

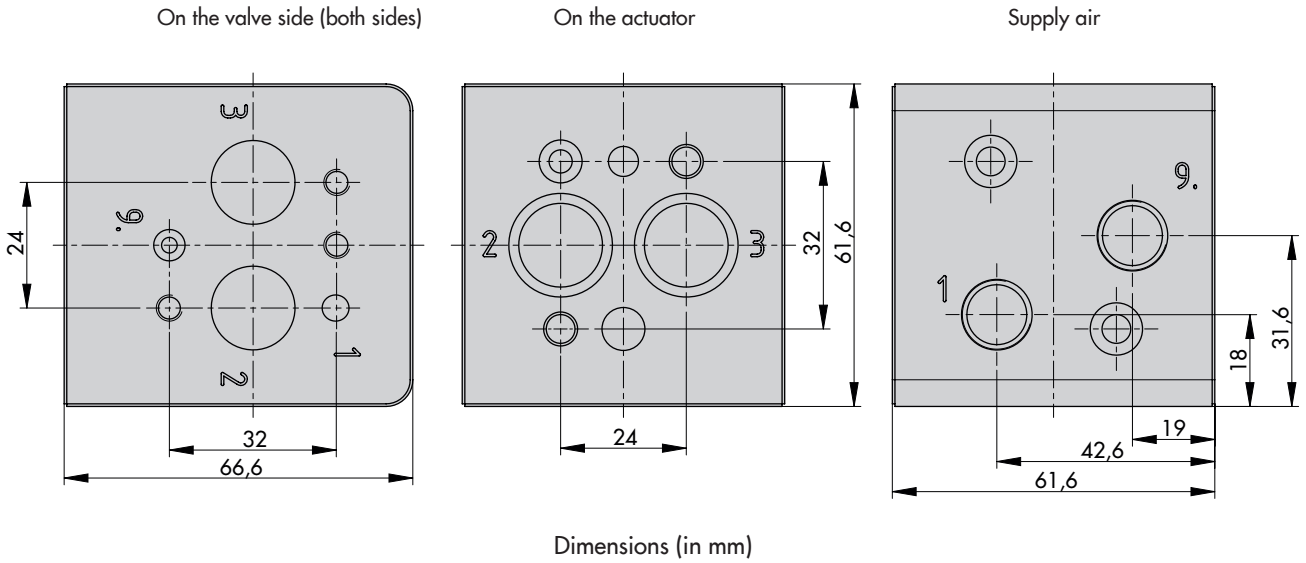

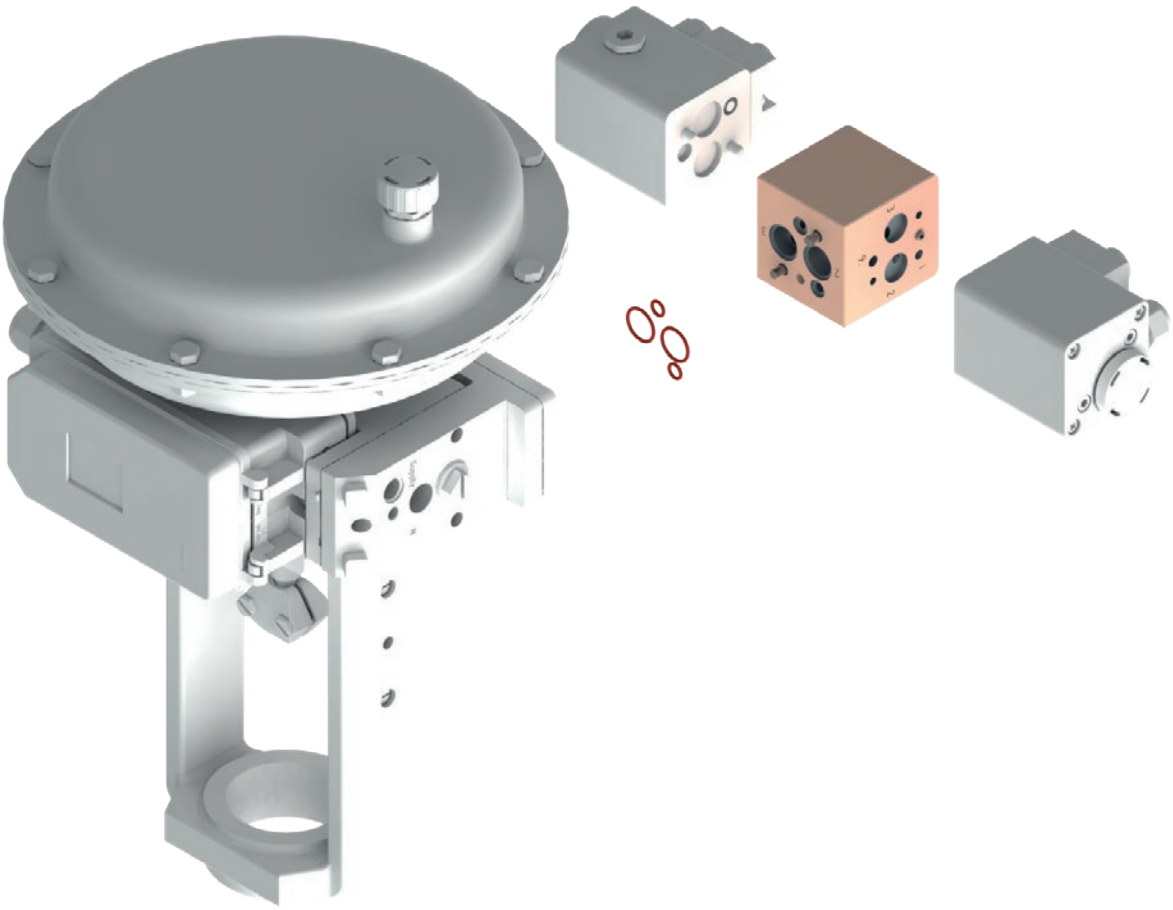

Fig. 28: *Adapter plate to mount Type 3967 Solenoid Valves on a linear actuator*

5.4 Emergency supply · NAMUR interface ½", integrated parallel connection through booster valve – 2oo2

Pneumatic booster valve made of aluminum/stainless steel, for pilot valves with NAMUR interface according to VDI/VDE 3847 on actuators with NAMUR interface according to VDI/VDE 3845 including fastening screws and seals.

➔ See Fig. 29.

Order no.:	Aluminum G ¼ **SIL**: **Configuration ID 5737887** [1)] Aluminum ¼ NPT **SIL**: **Configuration ID 5800280** [1)] Stainless steel G ¼ **SIL**: **Configuration ID 5800281** [1)] Stainless steel ¼ NPT **SIL**: **Configuration ID 5800283** [1)]
Mounting interface:	Actuators with VDI/VDE 3845 interface ½"
Pilot valve interface:	Pilot valves with extended NAMUR interface ¼" according to VDI/VDE 3847
Description of functions:	The booster valve is used to increase the availability through **parallel connection** of two pilot valves and raises their flow coefficient to K_{VS} 1.9. The pilot valves are mounted to the left and right on the extended NAMUR interfaces according to VDI/VDE 3847. The booster valve is fastened to the actuator using a third NAMUR interface according to VDI/VDE 3845.

1) Refer to the referenced documents for Type 3756 Pneumatic Booster Valve for more details and other versions.

i ***Note***

The pilot valves at V1 and V2 interfaces of the booster valve must have a venting.

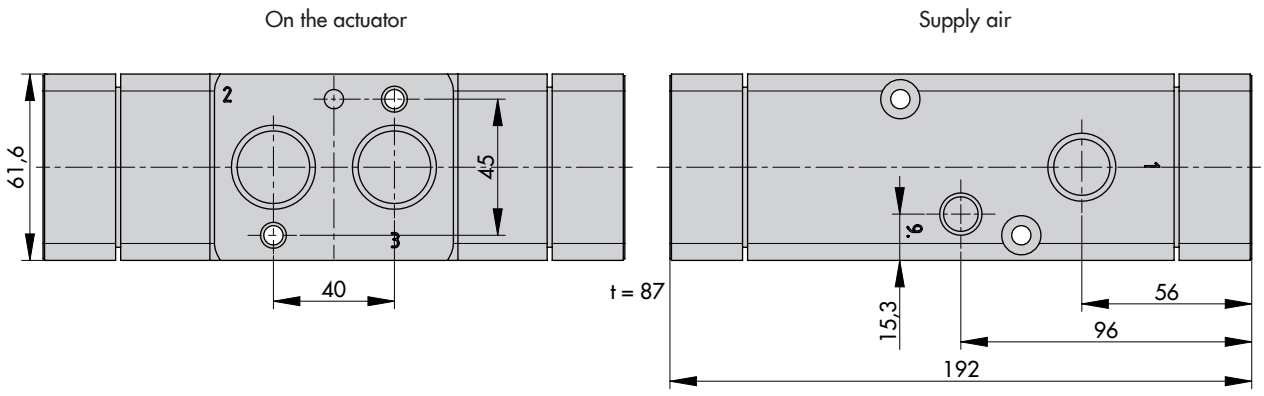

Dimensions (in mm)

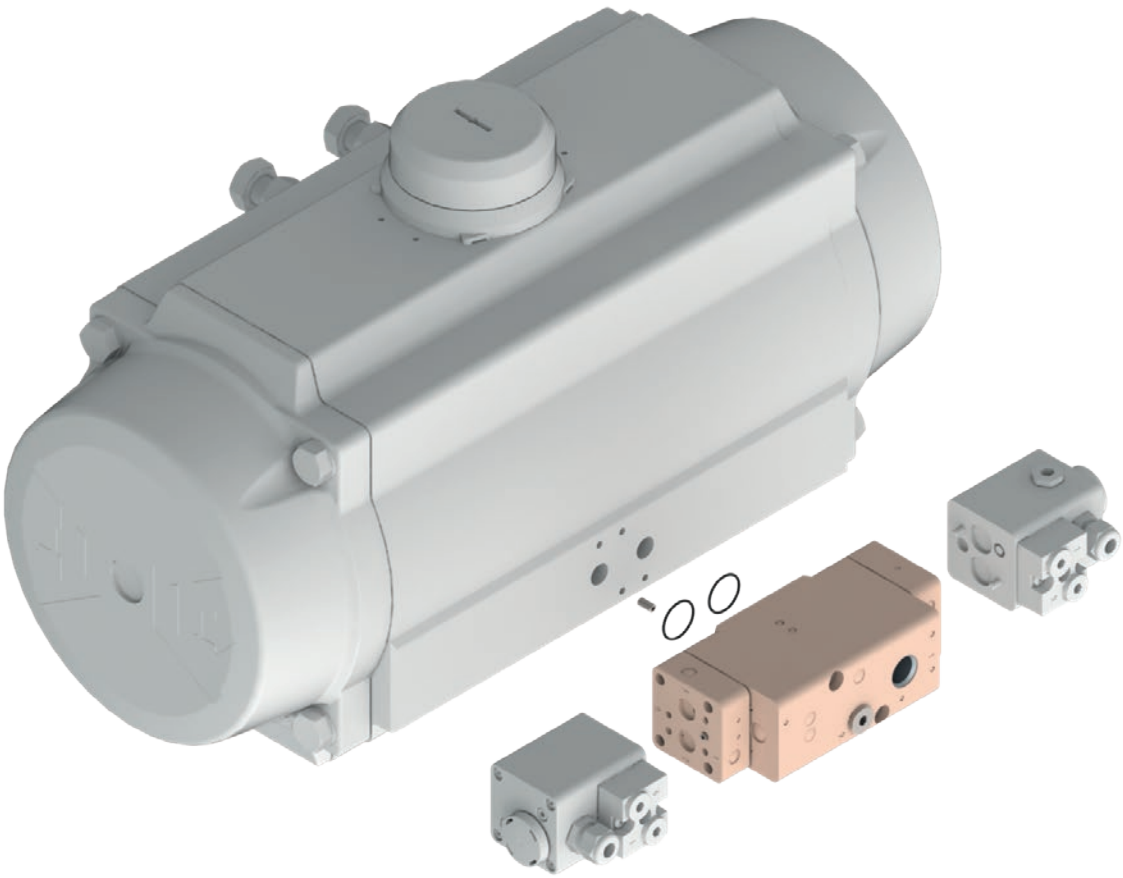

Fig. 29: *Booster valve to mount two Type 3967 Solenoid Valves on a rotary actuator*

5.5 Emergency venting · NAMUR interface ½“, integrated series connection through booster valve – 1oo2

Pneumatic booster valve made of aluminum/stainless steel, for pilot valves with NAMUR interface according to VDI/VDE 3847 on actuators with NAMUR interface according to VDI/VDE 3845 including fastening screws and seals.

➔ See Fig. 30.

Order no.:	Aluminum G ½ **SIL**: 3756 · **Configuration ID 5711460** [1)] Aluminum ½ NPT **SIL**: 3756 · **Configuration ID 5711464** [1)] Stainless steel G ½ **SIL**: 3756 · **Configuration ID 5711730** [1)] Stainless steel ½ NPT **SIL**: 3756 · **Configuration ID 5711726** [1)]
Mounting interface:	Actuators with VDI/VDE 3845 interface ½“
Pilot valve interface:	Pilot valves with extended NAMUR interface ¼“ according to VDI/VDE 3847
Description of functions:	The booster valve is used to increase the safety through **series connection** of two pilot valves and to raise their K_{VS} to 1.9. The pilot valves are mounted to the left and right on the extended NAMUR interfaces according to VDI/VDE 3847. The booster valve is fastened to the actuator using a third NAMUR interface according to VDI/VDE 3845.

1) Refer to the referenced documents for Type 3756 Pneumatic Booster Valve for more details and other versions.

i ***Note***

The pilot valves at V1 and V2 interfaces of the booster valve must have a venting.

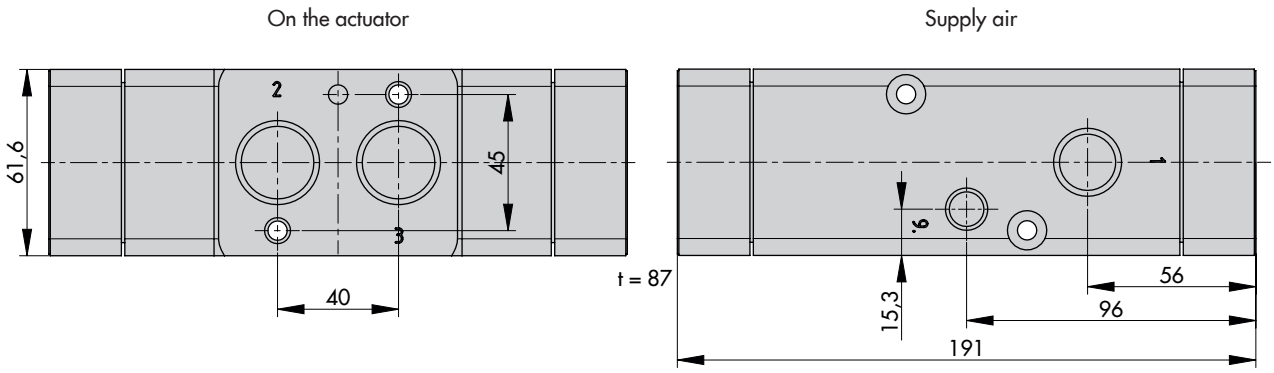

Dimensions (in mm)

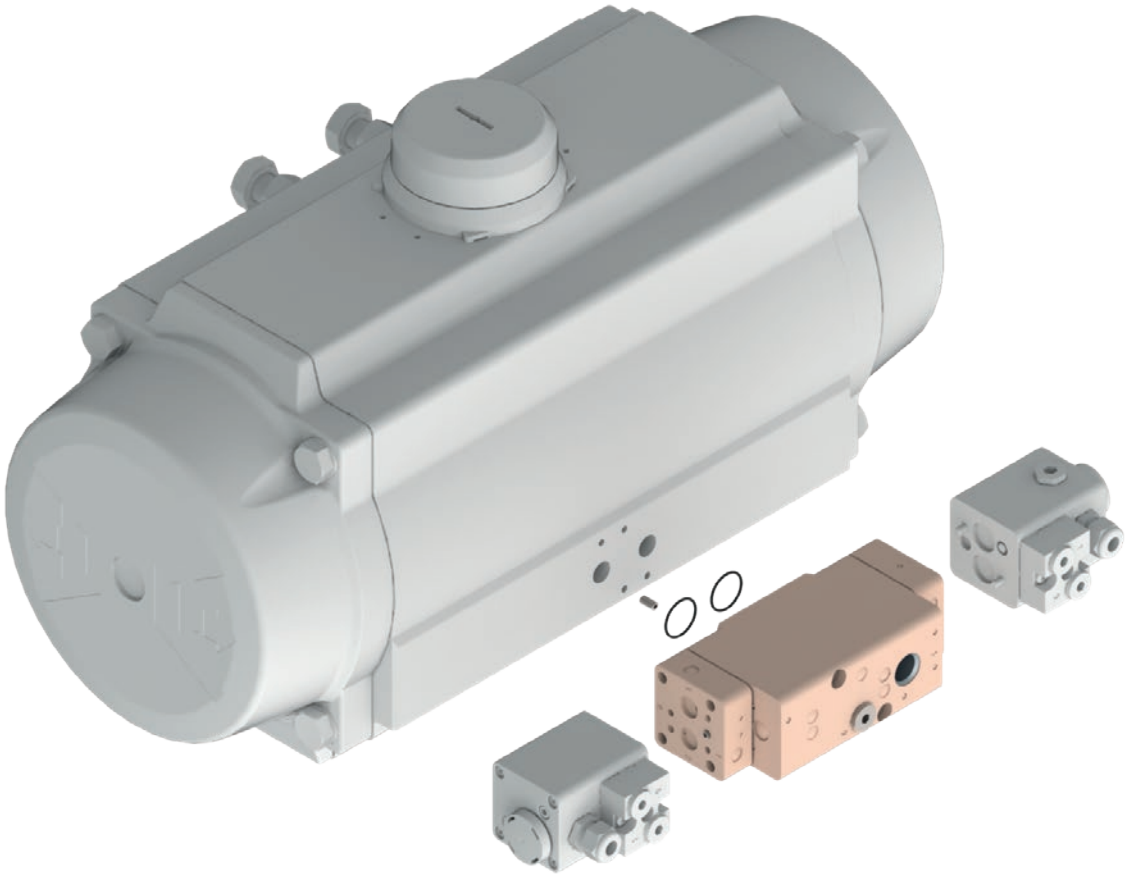

Fig. 30: *Booster valve to mount two Type 3967 Solenoid Valves on a rotary actuator*

5.6 Adapter plate for four NAMUR interfaces ¼“ on threaded connection ¼“

Adapter plate with threaded connections, made of aluminum, for pilot valves with NAMUR interface according to VDI/VDE 3847 on threaded connection including fastening screws and seals.

➔ See Fig. 31.

Order no.:	Aluminum G ¼: **1402-0438**
	Accessories Dummy plate: **1402-1290** [1)] Screw plug: **0070-0858** O-ring 14x1.5: **8421-0070**
Mounting interface:	Actuators with threaded connections
Pilot valve interface:	Pilot valves with extended NAMUR interface ¼“ according to VDI/VDE 3847
Description of functions:	The adapter plate is mounted between the actuator and pilot valve. The adapter plate is used to supply up to four pilot valves simultaneously over a central supply air connection. The pilot valves are mounted on the extended NAMUR interfaces according to VDI/VDE 3847 and can be included in the pipe hook-up using a connecting thread. Any connecting spaces not used can be sealed with a dummy plate (accessories).

[1)] Including fastening screws and gaskets

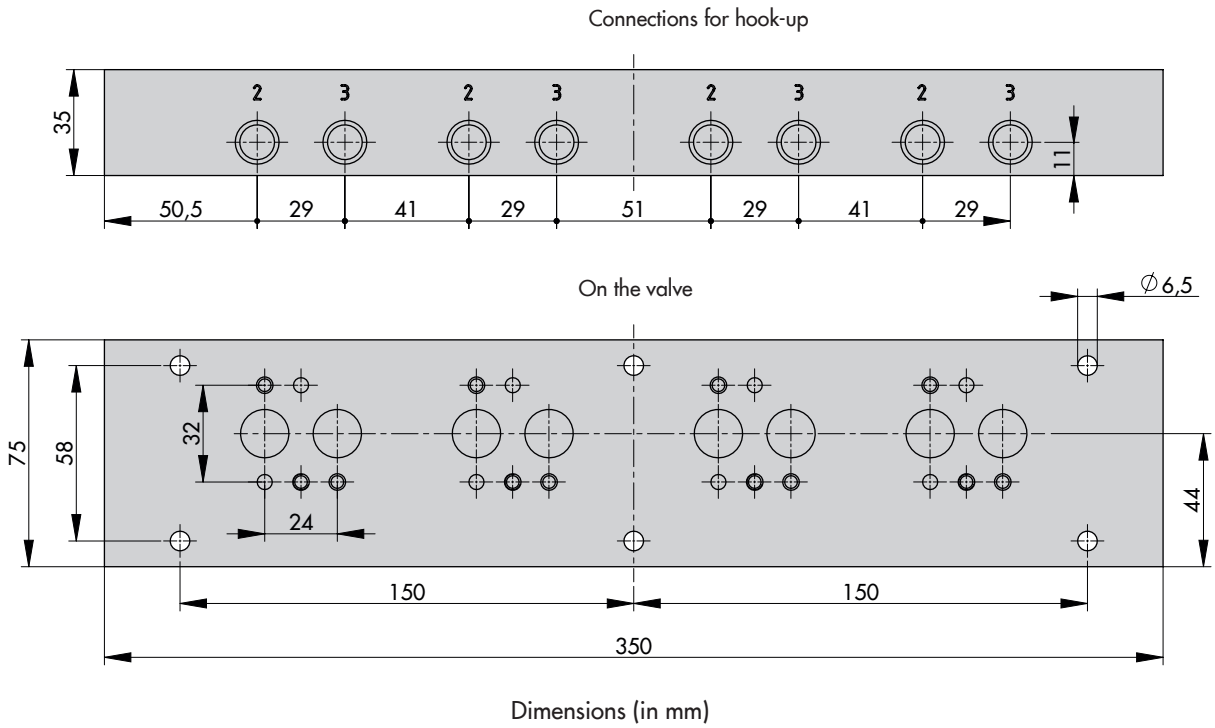

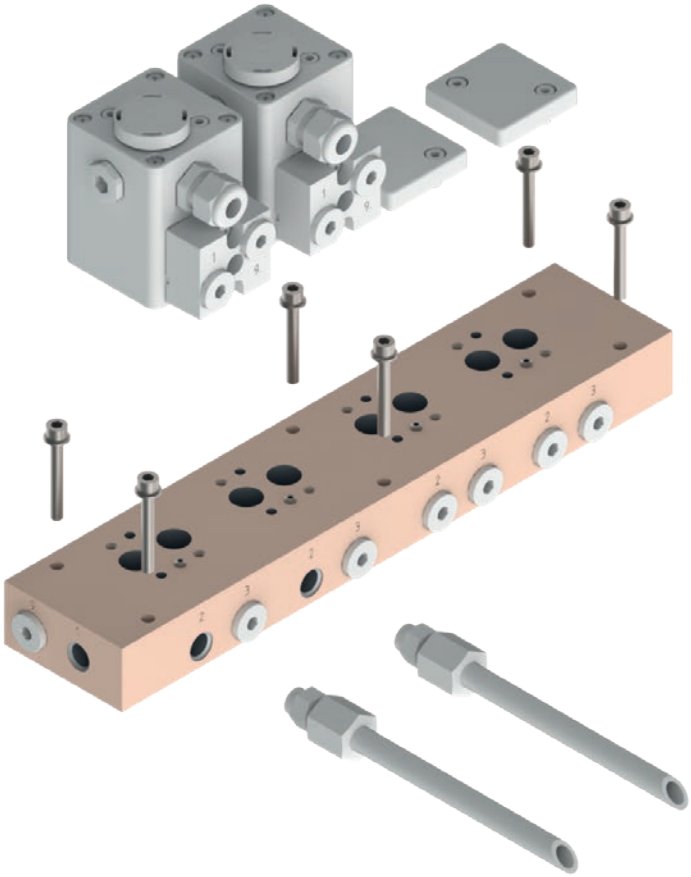

Fig. 31: *Adapter plate*

5.7 Adapter plate (closed-circuit principle)

Adapter plate made of aluminum, for pilot valves with NAMUR interface according to VDI/VDE 3847 on actuators with integral attachment according to VDI/VDE 3847 including fastening screws and seals.

➔ See Fig. 32.

Order no.:	Aluminum G ¼: **1402-1553**
Mounting interface:	Actuators with integral attachment with VDI/VDE 3847 interface (¼")
Pilot valve interface:	Pilot valves with extended NAMUR interface ¼" according to VDI/VDE 3847
Description of functions:	The adapter plate is mounted between the mounting block and pilot valve. The adapter plate is used to implement the closed-circuit principle. The adapter plate connects port 9 of the mounting block to the port 9 and port 3 of the pilot valve. As a result, closed-loop control of the actuator takes place when the pilot valve is energized. When the pilot valve is de-energized, the actuator is supplied with maximum air.

i ***Note***

This function is only provided when pilot-operated pilot valves are used.
The pilot valve must have a sealable venting port.

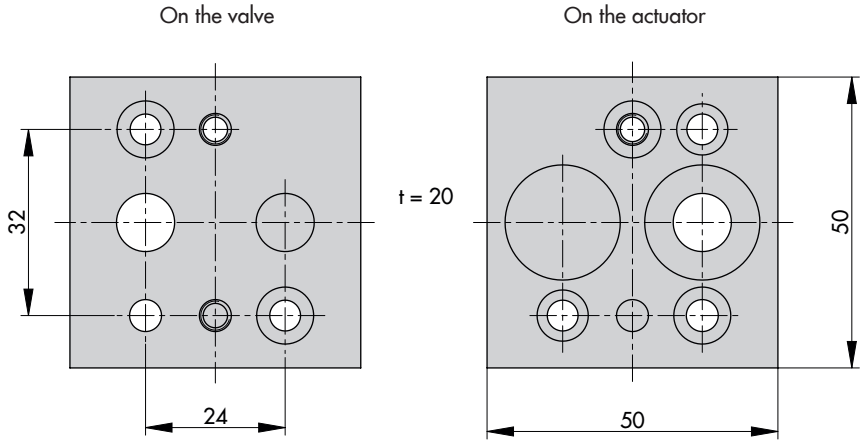

Dimensions (in mm)

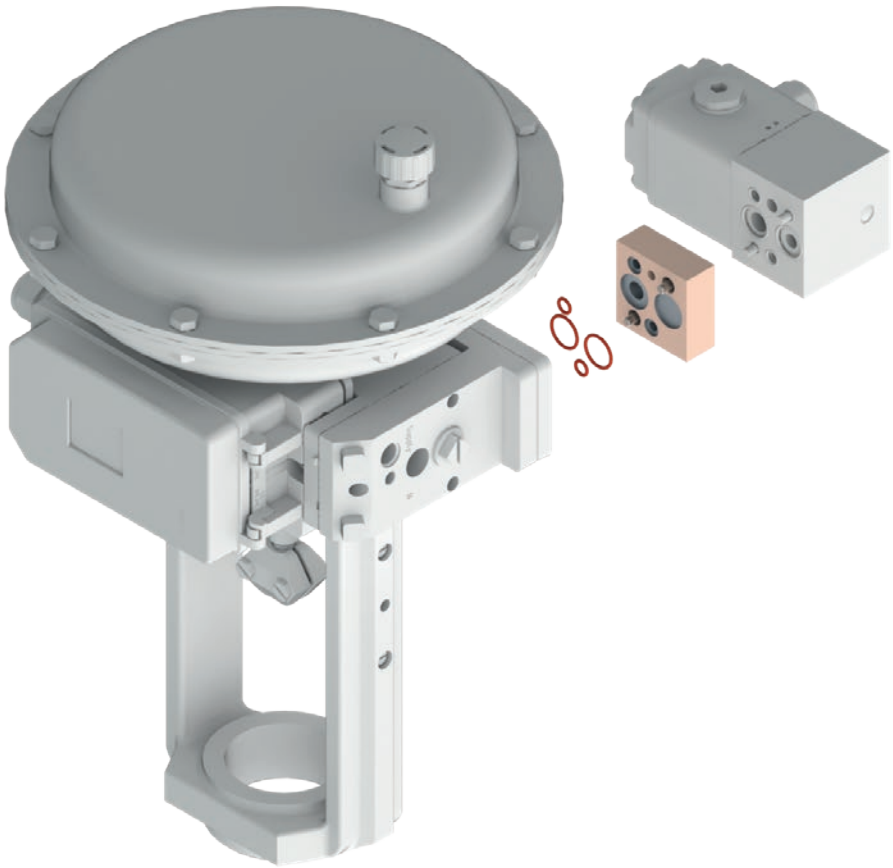

Fig. 32: *Adapter plate*